Hisense

R32
Refrigerant

TECHNICAL & SERVICE MANUAL V3.1—MULTI-SPLIT TYPE

AIR CONDITIONERS FREE MATCH DC Inverter LP

R32 2025_2026

ODU LP	AMW2-14U4RGC LP	AMW2-18U4RXC LP	AMW3-18U4RJC LP	AMW3-24U4RJC LP	AMW4-27U4RJC LP	AMW5-36U4RQC LP

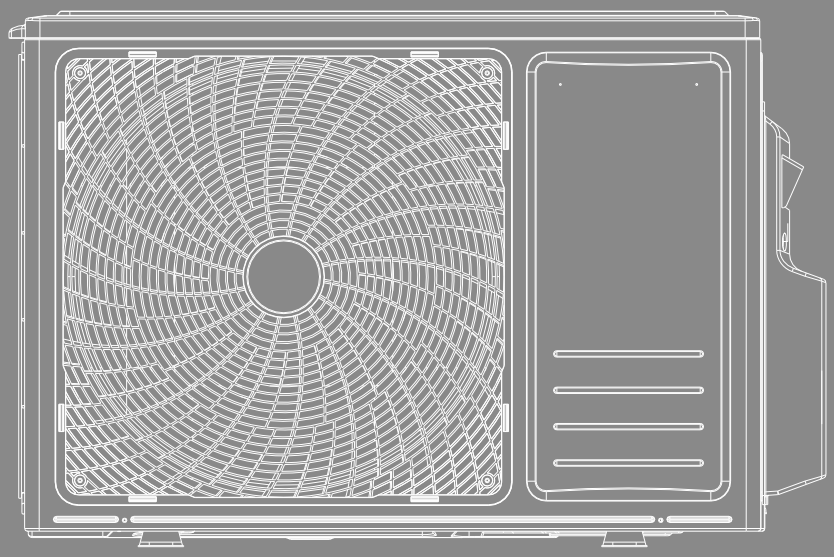

Model Multi-Split Outdoor Model

ODU LP	AMW2-14U4RGC LP	AMW2-18U4RXC LP	AMW3-18U4RJC LP	AMW3-24U4RJC LP	AMW4-27U4RJC LP	AMW5-36U4RQC LP

SAFETY SUMMARY

IMPORTANT NOTICE

- We pursue a policy of continuing improvement in design and performance of products. The right is therefore reserved to vary specifications without notice.
- We cannot anticipate every possible circumstance that might involve a potential hazard.
- This air conditioner is designed for standard air conditioning only. Do not use this air conditioner for other purposes such as drying clothes, refrigerating foods or for any other cooling or heating process. Do not let the air-out face animals or plants, it might have an adverse effect on them.
- The installer and system specialist shall secure safety against leakage according to local regulations or standards.
- Signal words (DANGER, WARNING and CAUTION) are used to identify levels of hazard seriousness. Definitions for identifying hazard levels are provided below with their respective signal words.

⚠DANGER : Immediate hazards which WILL result in severe personal injury or death.

⚠WARNING : Hazards or unsafe practices which COULD result in severe personal injury or death.

⚠CAUTION : Hazards or unsafe practices which COULD result in minor personal injury or product or property damage.

NOTE : Useful information for operation and/or maintenance.

- Installation should be performed by the dealer or other professional personnel. Improper installation may cause water leakage, electrical shock, or fire.

⚠DANGER

- Do not perform installation work, refrigerant piping work, drain piping and electrical wiring connection without referring to our installation manual. If the instructions are not followed, it may result in a water leakage, electric shock or a fire.
- Use refrigerant R32 in the refrigerant cycle.
- Do not pour water into the indoor or outdoor unit. These products are equipped with electrical parts. If poured, it will cause a serious electrical shock.
- Do not open the service cover or access panel for the indoor or outdoor units without turning OFF the main power supply.
- Do not touch or adjust safety devices inside the indoor or outdoor units. If these devices are touched or readjusted, it may cause a serious accident.
- Refrigerant leakage can cause difficulty in breathing due to insufficient air. Turn OFF the main switch, extinguish any naked flames and contact your service contractor, if refrigerant leakage occurs.
- Do perform air-tight test. Do not charge oxygen, acetylene or other flammable and poisonous gases into the refrigerant cycle when performing a leakage test or an air-tight test. These types of gases are extremely dangerous and can cause an explosion. It is recommended that nitrogen be used for this test.
- The installer and system specialist shall secure safety against refrigerant leakage according to local regulations or standards.
- Use an ELB (Electric Leakage Breaker). In the event of a fault, there is danger of an electric shock or a fire if it is not used.

⚠WARNING

- Do not use any sprays such as insecticide, lacquer, hair spray or other flammable gases within approximately one (1) meter from the system.

- If circuit breaker or fuse is often activated, stop the system and contact your service contractor.
- Check that the ground wire is securely connected. If the unit is not correctly grounded, it will lead to electric shock. Do not connect the ground wiring to gas piping, water piping, lightning conductor or ground wiring for telephone.
- Before performing any brazing work, check to ensure that there is no flammable material around when using refrigerant. Be sure to wear leather gloves to prevent cold injuries.
- Protect the wires, electrical parts, etc. from rats or other small animals.
  If not protected, rats may gnaw at unprotected parts, which may lead to fire.
- Fix the cables securely. External forces on the terminals could lead to a fire.
- Install the air conditioner on a solid base that can support the unit weight. An inadequate base or incomplete installation may cause injury in the event the unit falls off the base. Incomplete connections or clamping may cause terminal overheating or fire.
- Make sure that the outdoor unit is not covered with snow or ice, before operation.

⚠CAUTION

- Do not step or put any material on the product.
- Do not put any foreign material on the unit or inside the unit.

NOTE

- It is recommended that the room be ventilated every 3 to 4 hours.
- The air conditioner may not work properly under the following circumstances.
  The power transformer provides the same power or power as the air conditioner. The electrical equipment is too close to the power supply of the air conditioner. With the sharp change of power consumption and switching action, the power supply of the air conditioner will generate a large induction surge voltage.

CHECKING PRODUCT RECEIVED

- Upon receiving this product, inspect it for any shipping damage. Claims for damage, either apparent or concealed, should be filed immediately with the shipping company.
- Check the model number, electrical characteristics (power supply, voltage and frequency) and accessories to determine if they are correct.
  The standard utilization of the unit shall be explained in these instructions.
  Therefore, the utilization of the unit other than those indicated in these instructions is not recommended.
  Please contact your local agent, as the occasion arises.

- ***The figures in this manual are based on the external view of a standard model. Consequently, the shape may differ from that of the air conditioner you have selected.***
- ***Letter K in the manual stands for kBtu/h, for example 12K,14K,18K,21K,24K, which means model size, not real capacity.***

Multi-Split Type Air Conditioner Service Manual

Table of Contents

1. General 1
    1.1 Features 1
    1.2 Product lineup 3
    1.3 Nomenclature 3
    1.4 Unit installation 4
    1.5 Working range 4
    1.6 Product appearance 5
2. Outlines and dimensions 6
3. Electrical data 11
4. Capacities and selection data 12
    4.1 Capacity characteristic charts 12
    4.2 Piping length correction factor 61
    4.3 Correction factors according to defrosting operation 62
5. Sound pressure data 64
6. Refrigerant cycle 66
7. Wiring diagram 68
    7.1 Electrical wiring diagrams 68
    7.2 Control board picture 72
    7.3 Common wiring 80
8. Field setting 82
    8.1 DIP setting 82
    8.2 Running Parameter Query 84
9. Piping work and refrigerant charge 86
    9.1 MAX. length allowed 86
    9.2 Oil trap 86
    9.3 Additional refrigerant charge 87
10. Installation tools and installation flow chart 88
    10.1 Necessary tools and instrument list for installation 88
    10.2 Installation flow chart 89
11. Control mode 90
12. Sensor parameter 92
13. Troubleshooting 101
    13.1 Trouble guide 101
    13.2 Fault codes 104
14. Checking components 112
    14.1 Check refrigerant system 112
    14.2 Check parts unit 113
15. Disassembly procedure 115

1. General

1.1 Features

➢ Twin Rotary DC Inverter Compressor

The twin rotary inverter compressor design reduces friction during operation for smoother rotation with less vibration, while also preventing leakage of refrigerant gas during compression. The result is a far quieter and more efficient air conditioner.

➢ 3-DC Inverter Technology

3-DC Inverter technology allows for extremely accurate control of compressor rotation speed, saving roughly 50% more energy than traditional air conditioners. Moreover, it guarantees that fan motor greatly reduces the loss owed to the typical owing dispersion of AC motors and more efficiently reaches the set temperature.

➢ Electronic Expansion Valve

Inside the outdoor unit is the electronic expansion valve, which regulates and optimizes the refrigerant quantity to all running indoor units.

➢ Self Recovery of Power Break

When the power supply is recovered after break, all presets are still effective and the air conditioner can run according to the original setting.

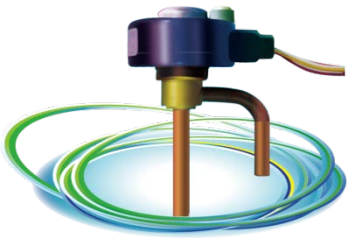

1. GENERAL

➢ Comfortable temperature control

DC inverter power control uses its full capacity at startup to cool/warm quickly. As soon as the set temperature is reached, it carefully adjusts current frequency to prevent temperature fluctuation and energy loss.

➢ Long piping for flexible installation

The ample maximum piping length of 50 m permits more freedom in the placement of air conditioner units and enables you to optimise interior space.

➢ Various Indoor & Outdoor Unit Types

The new line-up expands the range of layout options both indoors and outdoors.

More methods, more conveniently.

➢ Optional Remote Controller

A variety of convenient controller systems permit individual control of settings such as temperature, airflow volume, and operation duration.

1.2 Product lineup

Type \ Model(Btu/h)		14K	18K		24K	27K		36K
Up to 2 IDUs		●	●					
Up to 3 IDUs			●		●			
Up to 4 IDUs						●		
Up to 5 IDUs								●

●: available model

1.3 Nomenclature

A M W 2 - 14 U 4 R G C LP - Long Pipe

- C: Series
- G: Outdoor Unit Code
- R: Refrigerant Type R: R32 S: R410A F: R22
- 4: Power Supply
  2: 220V ~/60Hz 4: 220-240V ~/50Hz
  5: 220-230V ~/60Hz 6: 380-415V 3N~/50Hz
- U: Type of Mode:
  U: DC-Invert HP, H: Fixed Speed HP,
  C: Fixed Speed CO, E: Heat Pump with electric heater
- 14: Cooling Capacity: 14×10^3 Btu/h
- 2: Quantity of Indoor Units Connected
- W: Type of Product
  D: Duct, C: Cassette, V: Ceiling & Floor, F: Floor standing, W: Outdoor Unit
- M: Multi-split
- A: Air Conditioner

1.4 Unit installation

With the DC inverter technology, one outdoor unit can be connected with 5 indoor units at most.

Model (Btu/h)	Max. Combined Quantity of Indoor Units
14K/18K	2
18K/24K	3
27K	4
36K	5

1.5 Working range

Power supply

Working Voltage	176V ~ 253V
Voltage Imbalance	Within a 3% deviation from each voltage at the main terminal of outdoor unit
Starting Voltage	Higher than 85% of the Rated Voltage

Operating temperature range

This air conditioner is designed for the following outdoor operating temperatures.

Series	Mode	Outdoor operating temperature (℃)	
		maximum	minimum
DC-Inverter Multi-Split Air Conditioner (Heat pump type)	Cooling Operation	43	-15
	Heating Operation	24	0

Storage condition: Temperature: -25~60℃
Humidity: 30%~80%

1.6 Product appearance

Model (Cooling Capacity: Btu/h)	Outdoor unit
14K	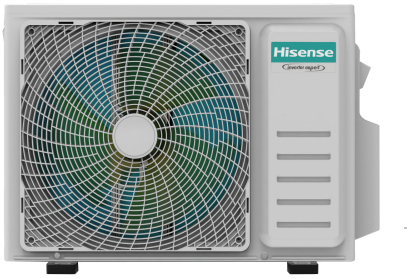
18K	
Up to 3 IDUs 24K	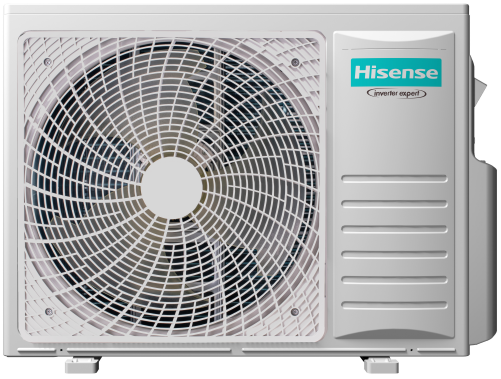
Up to 4 IDUs 27K	
Up to 5 IDUs 36K	

2. Outlines and dimensions

14K

Unit: (mm)

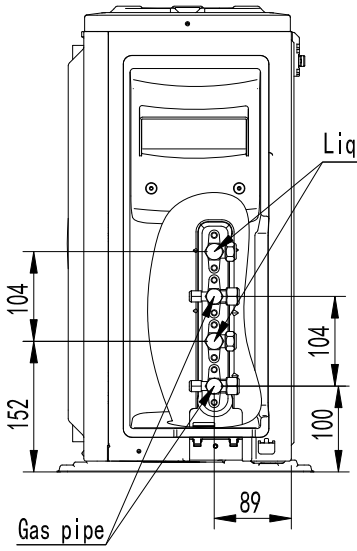

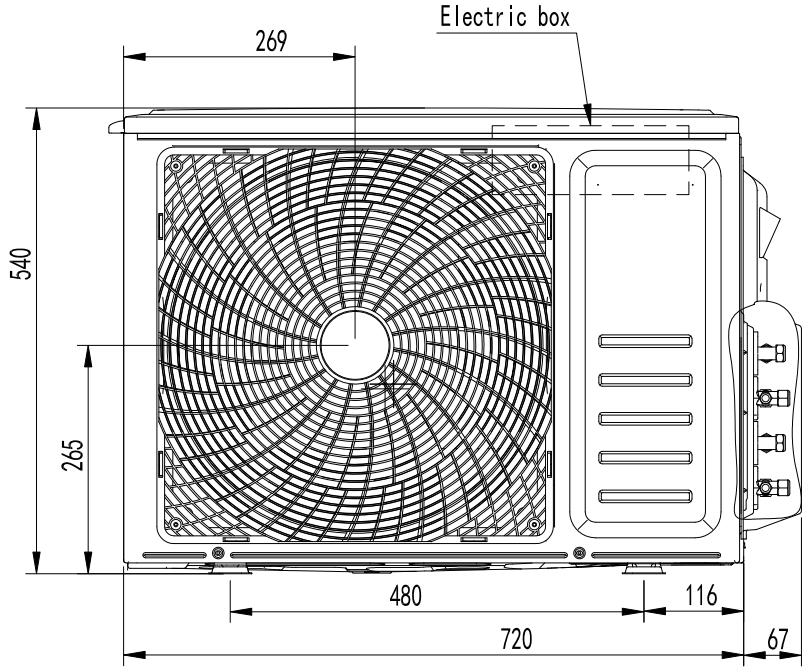

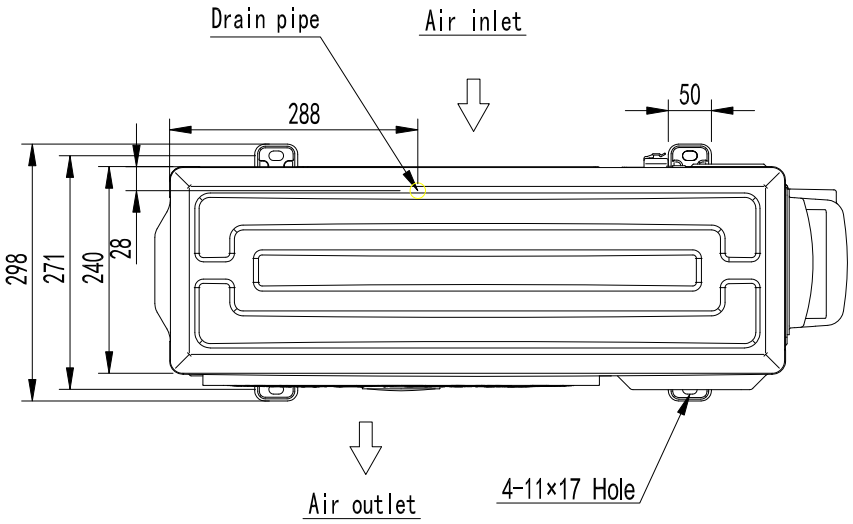

2. OUTLINES AND DIMENSIONS

18K

Unit: (mm)

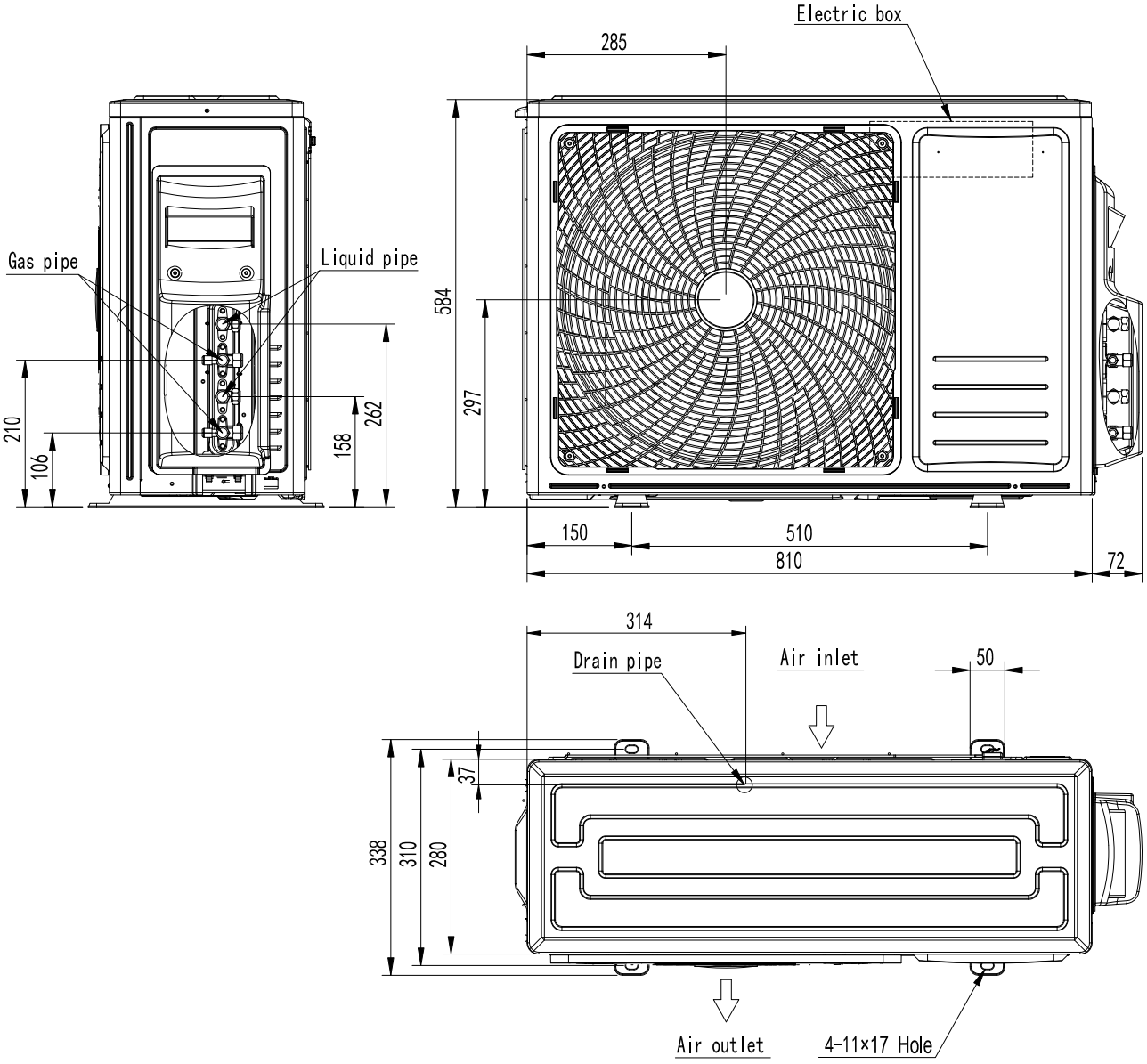

2. OUTLINES AND DIMENSIONS

Up to 3 indoor units
series 24K

Unit: (mm)

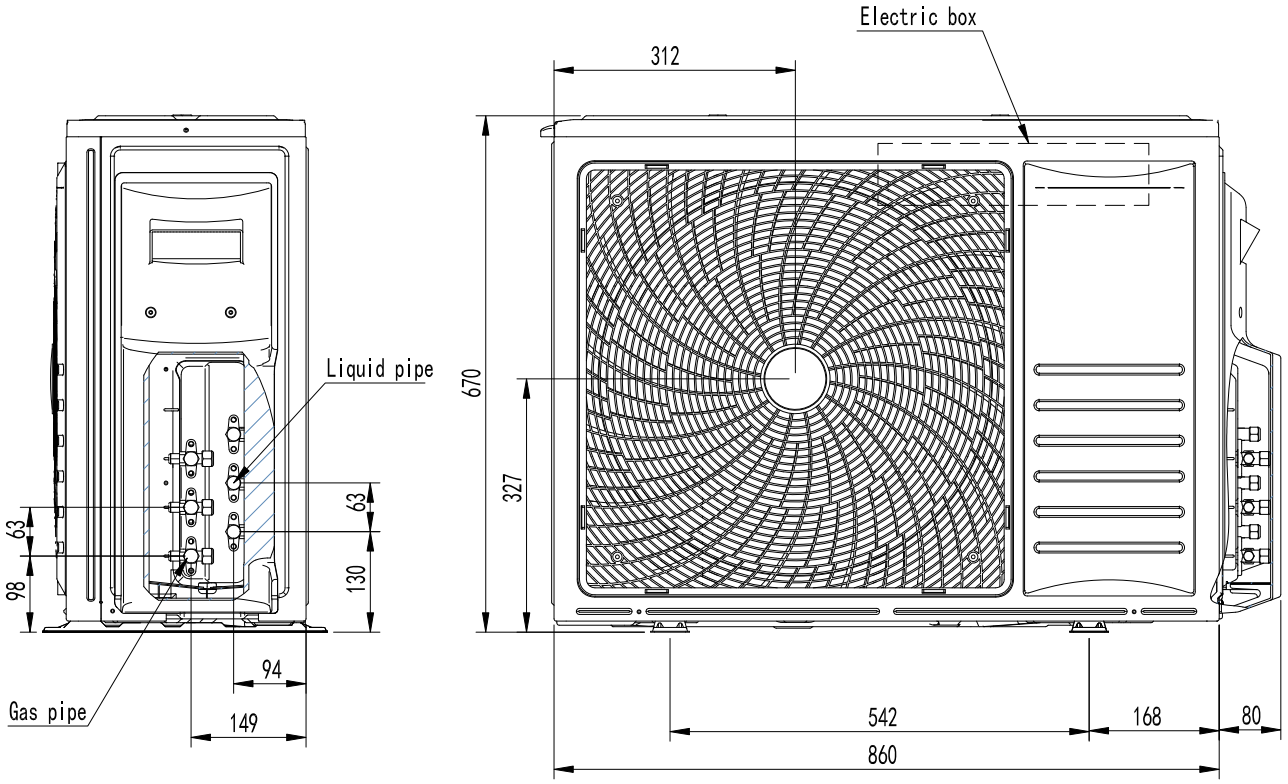

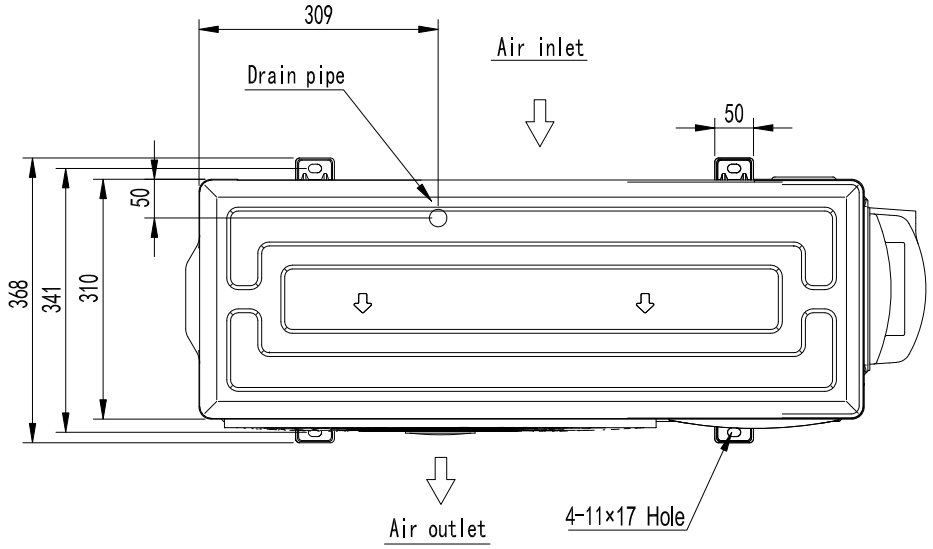

2. OUTLINES AND DIMENSIONS

Up to 4 indoor units series

27K

Unit: (mm)

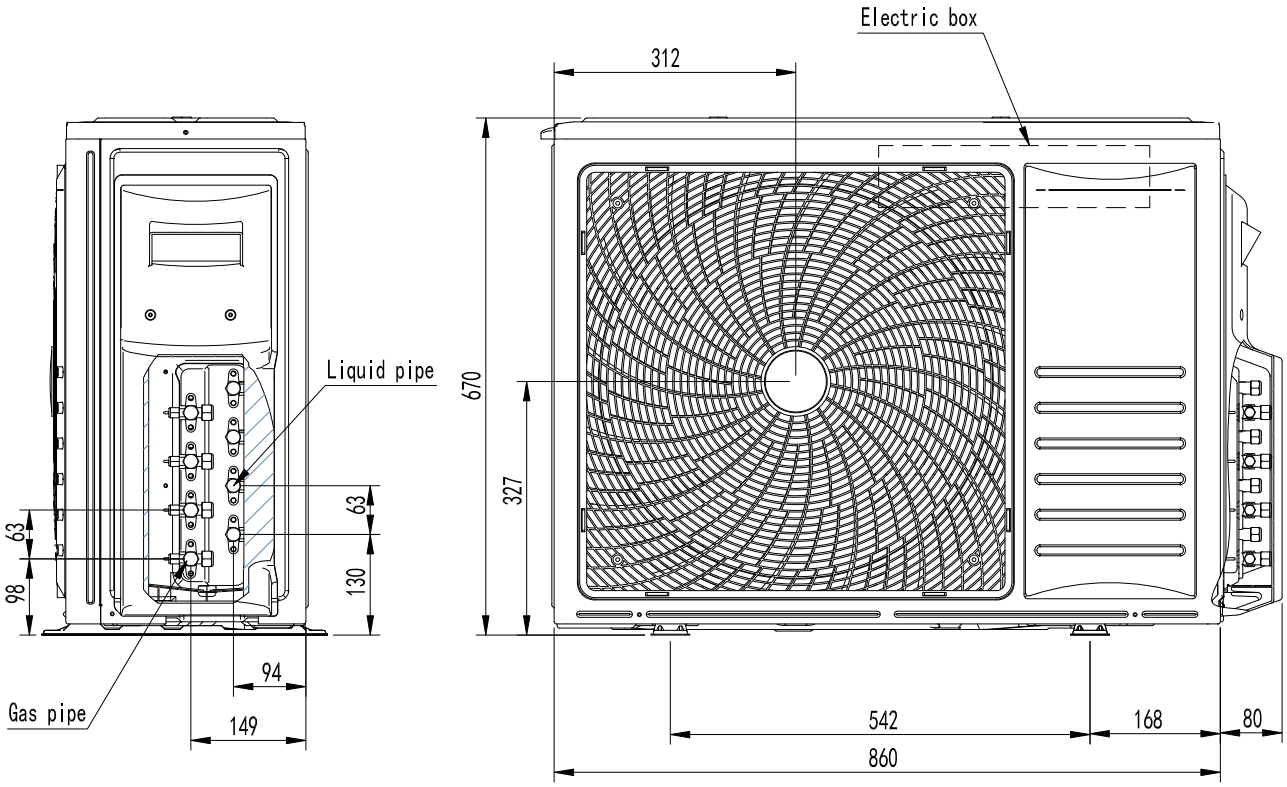

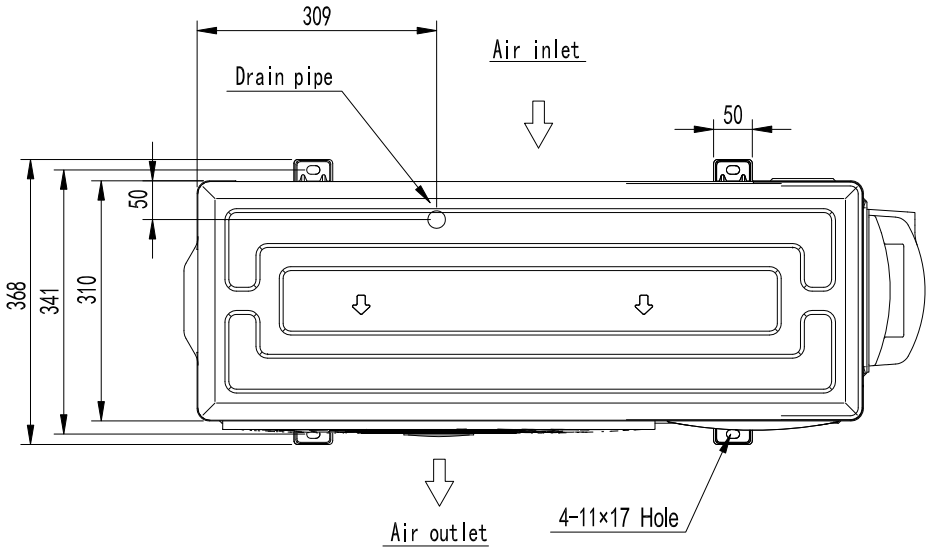

2. OUTLINES AND DIMENSIONS

Up to 5 indoor units
series 36K

Unit: (mm)

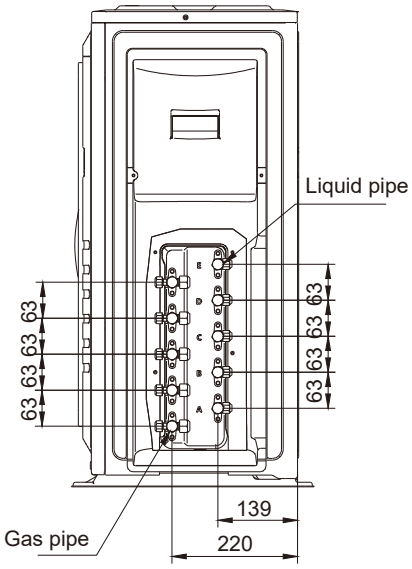

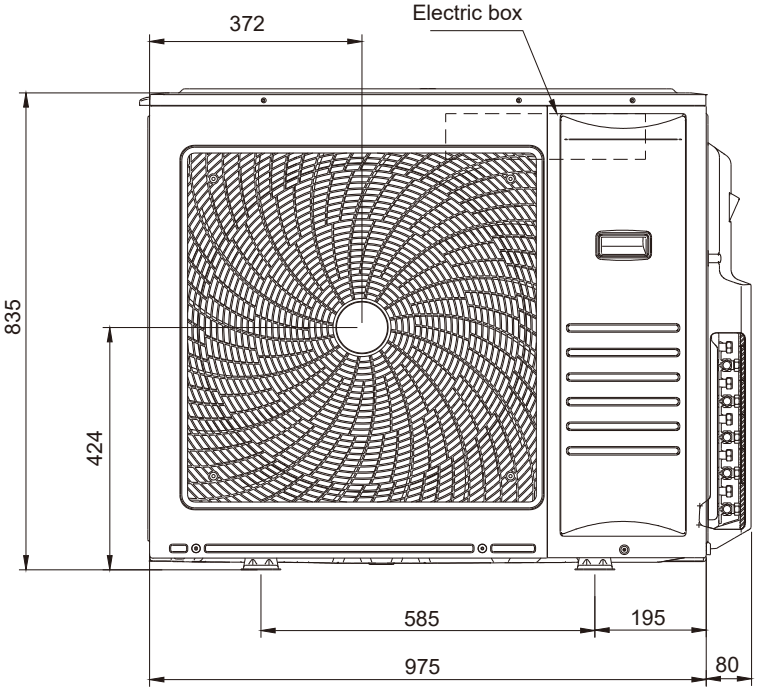

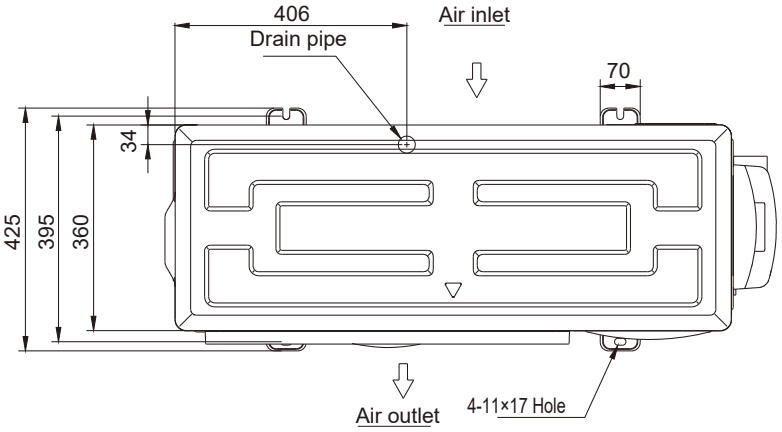

3. Electrical data

Model	Power supply			Applicable voltage		ELB	
	Voltage(V)	PH	Frequency	Umin(V)	Umax(V)	Nominal Current(A)	Nominal Sensitive Current(mA)
14K	220-240	1	50	176	253	16	30
AMW2-18U4RXC LP	220-240	1	50	176	253	16	30
AMW3-18U4RJC LP	220-240	1	50	176	253	20	30
24K/27K	220-240	1	50	176	253	25	30
36K	220-240	1	50	176	253	32	30

NOTE:

1. The above compressor data is based on 100% capacity combination of indoor units at the rated operating frequency.
2. This data is based on the same conditions as the nominal cooling capacities.
3. The values of the types and ratings of protective devices and automation specified in the table are advisory.
   The selection of types and ratings of protective devices and automation must be carried out in accordance with local regulations and legislation.
4. The values of the types and ratings of protective devices and automation specified in the table are advisory.
5. The selection of types and ratings of protective devices and automation must be carried out in accordance with local regulations and legislation.

4. Capacities and selection data

4.1 Capacity characteristic charts

The following charts show the characteristics of outdoor unit capacity, which corresponds with the operating ambient temperature of outdoor unit.

Conditions:

① Pipe length/height difference: 5m / 0m ③ Indoor fan speed at high fan speed

② Compressor at rated inverter frequency

④ Capacity loss due to white frost and defrost operation is not included.

4. CAPACITIES AND SELECTION DATA

14K (Up to 2 indoor units series)

| | | | Cooling Operation PERFORMANCE DATA | | |

4. CAPACITIES AND SELECTION DATA

| | | | Cooling Operation PERFORMANCE DATA | | |

4. CAPACITIES AND SELECTION DATA

| | | | Cooling Operation PERFORMANCE DATA | | |

4. CAPACITIES AND SELECTION DATA

| | | | Cooling Operation PERFORMANCE DATA | | |

4. CAPACITIES AND SELECTION DATA

| | | | Cooling Operation PERFORMANCE DATA | | |

4. CAPACITIES AND SELECTION DATA

| | | | Cooling Operation PERFORMANCE DATA | | |

4. CAPACITIES AND SELECTION DATA

14K (Up to 2 indoor units series)

HEATING PERFORMANCE DATA

COMBINATION (%)	INDOOR DB(℃)	OUTDOOR WB(℃)									
		0		5		10		15		20	
		Q	INPUT	Q	INPUT	Q	INPUT	Q	INPUT	Q	INPUT
130%	15	4.67	945	5.08	994	5.49	1044	5.76	1075	5.93	1097
	16	4.62	952	5.02	1002	5.42	1053	5.69	1084	5.86	1106
	17	4.56	960	4.96	1011	5.36	1061	5.62	1093	5.79	1115
	18	4.51	968	4.90	1019	5.29	1070	5.56	1102	5.72	1124
	19	4.45	976	4.84	1027	5.23	1078	5.49	1111	5.66	1133
	20	4.41	983	4.79	1035	5.18	1087	5.44	1120	5.60	1142
	21	4.36	994	4.74	1047	5.12	1099	5.37	1132	5.53	1154
	22	4.31	1005	4.68	1058	5.05	1111	5.31	1144	5.47	1167
	23	4.25	1016	4.62	1070	4.99	1123	5.24	1157	5.40	1180
	24	4.20	1027	4.57	1081	4.93	1136	5.18	1170	5.34	1193
	25	4.15	1039	4.51	1093	4.87	1148	5.12	1182	5.27	1206
	26	4.10	1050	4.46	1105	4.82	1161	5.06	1195	5.21	1219
	27	4.05	1062	4.41	1118	4.76	1173	5.00	1209	5.15	1233
	28	4.00	1073	4.35	1130	4.70	1186	4.94	1222	5.08	1246
	29	3.96	1085	4.30	1142	4.64	1199	4.88	1235	5.02	1260
	30	3.91	1097	4.25	1155	4.59	1213	4.82	1249	4.96	1274

COMBINATION (%)	INDOOR DB(℃)	OUTDOOR WB(℃)									
		0		5		10		15		20	
		Q	INPUT	Q	INPUT	Q	INPUT	Q	INPUT	Q	INPUT
120%	15	4.54	900	4.93	947	5.33	994	5.59	1024	5.76	1045
	16	4.48	907	4.87	955	5.26	1002	5.53	1032	5.69	1053
	17	4.43	914	4.81	962	5.20	1011	5.46	1041	5.62	1062
	18	4.38	922	4.76	970	5.14	1019	5.40	1049	5.56	1070
	19	4.33	929	4.70	978	5.08	1027	5.33	1058	5.49	1079
	20	4.28	937	4.65	986	5.03	1035	5.28	1066	5.44	1088
	21	4.23	947	4.60	997	4.97	1047	5.22	1078	5.37	1099
	22	4.18	957	4.54	1008	4.91	1058	5.15	1090	5.31	1112
	23	4.13	968	4.49	1019	4.85	1070	5.09	1102	5.24	1124
	24	4.08	978	4.44	1030	4.79	1081	5.03	1114	5.18	1136
	25	4.03	989	4.38	1041	4.73	1093	4.97	1126	5.12	1149
	26	3.98	1000	4.33	1053	4.68	1105	4.91	1139	5.06	1161
	27	3.94	1011	4.28	1064	4.62	1118	4.85	1151	5.00	1174
	28	3.89	1022	4.23	1076	4.56	1130	4.79	1164	4.94	1187
	29	3.84	1033	4.18	1088	4.51	1142	4.73	1177	4.88	1200
	30	3.80	1045	4.13	1100	4.46	1155	4.68	1189	4.82	1213

COMBINATION (%)	INDOOR DB(℃)	OUTDOOR WB(℃)									
		0		5		10		15		20	
		Q	INPUT	Q	INPUT	Q	INPUT	Q	INPUT	Q	INPUT
110%	15	4.40	882	4.79	928	5.17	975	5.43	1004	5.59	1024
	16	4.35	889	4.73	936	5.11	983	5.36	1012	5.53	1032
	17	4.30	896	4.67	944	5.05	991	5.30	1020	5.46	1041
	18	4.25	904	4.62	951	4.99	999	5.24	1029	5.40	1049
	19	4.20	911	4.56	959	4.93	1007	5.18	1037	5.33	1058
	20	4.16	918	4.52	967	4.88	1015	5.12	1045	5.28	1066
	21	4.11	928	4.46	977	4.82	1026	5.06	1057	5.22	1078
	22	4.06	939	4.41	988	4.76	1037	5.00	1068	5.15	1090
	23	4.01	949	4.36	999	4.71	1049	4.94	1080	5.09	1102
	24	3.96	959	4.31	1010	4.65	1060	4.88	1092	5.03	1114
	25	3.91	970	4.25	1021	4.59	1072	4.82	1104	4.97	1126
	26	3.87	980	4.20	1032	4.54	1084	4.77	1116	4.91	1139
	27	3.82	991	4.15	1043	4.49	1096	4.71	1128	4.85	1151
	28	3.77	1002	4.10	1055	4.43	1108	4.65	1141	4.79	1164
	29	3.73	1013	4.05	1067	4.38	1120	4.60	1153	4.73	1177
	30	3.68	1024	4.01	1078	4.33	1132	4.54	1166	4.68	1189

4. CAPACITIES AND SELECTION DATA

COMBINATION (%)	INDOOR DB(℃)	OUTDOOR WB(℃) 0		5		10		15		20	
		Q	INPUT	Q	INPUT	Q	INPUT	Q	INPUT	Q	INPUT
100%	15	4.28	856	4.65	901	5.02	947	5.27	975	5.43	994
	16	4.23	863	4.59	909	4.96	954	5.21	983	5.36	1002
	17	4.18	870	4.54	916	4.90	962	5.15	991	5.30	1011
	18	4.13	877	4.48	923	4.84	970	5.09	999	5.24	1019
	19	4.08	884	4.43	931	4.79	977	5.03	1007	5.18	1027
	20	4.04	891	4.39	938	4.74	985	4.98	1015	5.12	1035
	21	3.99	901	4.33	949	4.68	996	4.92	1026	5.06	1047
	22	3.94	911	4.28	959	4.63	1007	4.86	1037	5.00	1058
	23	3.89	921	4.23	970	4.57	1018	4.80	1049	4.94	1070
	24	3.85	931	4.18	980	4.52	1029	4.74	1060	4.88	1081
	25	3.80	942	4.13	991	4.46	1041	4.68	1072	4.82	1093
	26	3.75	952	4.08	1002	4.41	1052	4.63	1084	4.77	1105
	27	3.71	962	4.03	1013	4.35	1064	4.57	1096	4.71	1118
	28	3.66	973	3.98	1024	4.30	1075	4.52	1108	4.65	1130
	29	3.62	984	3.94	1035	4.25	1087	4.46	1120	4.60	1142
	30	3.58	995	3.89	1047	4.20	1099	4.41	1132	4.54	1155

COMBINA (%)		OUTDOOR WB(℃) 0		5		10		15		20	
		Q	INPUT	Q	INPUT	Q	INPUT	Q	INPUT	Q	INPUT
90%	15	4.13	841	4.49	885	4.84	929	5.09	957	5.24	976
	16	4.08	848	4.43	892	4.79	937	5.03	965	5.18	984
	17	4.03	855	4.38	900	4.73	945	4.97	973	5.12	992
	18	3.98	861	4.33	907	4.67	952	4.91	981	5.05	1000
	19	3.93	868	4.28	914	4.62	960	4.85	989	4.99	1008
	20	3.90	875	4.23	921	4.57	968	4.80	997	4.95	1017
	21	3.85	885	4.18	932	4.52	978	4.74	1008	4.89	1028
	22	3.80	895	4.13	942	4.46	989	4.69	1019	4.83	1039
	23	3.76	905	4.08	952	4.41	1000	4.63	1030	4.77	1050
	24	3.71	915	4.03	963	4.36	1011	4.57	1041	4.71	1062
	25	3.67	925	3.99	973	4.30	1022	4.52	1053	4.66	1074
	26	3.62	935	3.94	984	4.25	1033	4.47	1064	4.60	1085
	27	3.58	945	3.89	995	4.20	1045	4.41	1076	4.54	1097
	28	3.54	955	3.84	1006	4.15	1056	4.36	1088	4.49	1109
	29	3.49	966	3.80	1017	4.10	1068	4.31	1100	4.44	1122
	30	3.45	977	3.75	1028	4.05	1079	4.26	1112	4.38	1134

COMBINATION (%)	INDOOR DB(℃)	OUTDOOR WB(℃) 15	20	-15	-10	-5	0	5	10	15	20
		Q	INPUT	Q	INPUT	Q	INPUT	Q	INPUT	Q	INPUT
80%	15	4.00	833	4.35	876	4.70	920	4.93	948	5.08	967
	16	3.96	839	4.30	883	4.64	928	4.88	955	5.02	975
	17	3.91	846	4.25	891	4.59	935	4.82	963	4.96	982
	18	3.86	853	4.20	898	4.53	943	4.76	971	4.90	990
	19	3.82	860	4.15	905	4.48	950	4.70	979	4.84	998
	20	3.78	867	4.11	912	4.44	958	4.66	987	4.80	1006
	21	3.73	876	4.06	922	4.38	968	4.60	997	4.74	1017
	22	3.69	886	4.01	932	4.33	979	4.55	1008	4.68	1029
	23	3.64	896	3.96	943	4.28	990	4.49	1020	4.63	1040
	24	3.60	905	3.91	953	4.23	1001	4.44	1031	4.57	1051
	25	3.56	915	3.87	964	4.18	1012	4.38	1042	4.52	1063
	26	3.51	925	3.82	974	4.13	1023	4.33	1054	4.46	1075
	27	3.47	936	3.77	985	4.08	1034	4.28	1065	4.41	1086
	28	3.43	946	3.73	996	4.03	1045	4.23	1077	4.36	1098
	29	3.39	956	3.68	1007	3.98	1057	4.18	1089	4.30	1110
	30	3.35	967	3.64	1018	3.93	1069	4.13	1101	4.25	1123

Remarks:
Q: Total Cooling Capacity (Gross) **kW**
INPUT: Power Input (including the compressor, evap. fan motor & cond. **W**
DB: Dry Bulb Temperature
WB: Wet Bulb Temperature

18K(Up to 2 indoor units series)

| | | | Cooling Operation PERFORMANCE DATA | | |

4. CAPACITIES AND SELECTION DATA

| | | | Cooling Operation PERFORMANCE DATA | | |

4. CAPACITIES AND SELECTION DATA

| | | | Cooling Operation PERFORMANCE DATA | | |

4. CAPACITIES AND SELECTION DATA

| | | | Cooling Operation PERFORMANCE DATA | | |

4. CAPACITIES AND SELECTION DATA

| | | | Cooling Operation PERFORMANCE DATA | | |

4. CAPACITIES AND SELECTION DATA

| | | | Cooling Operation PERFORMANCE DATA | | |

5. CAPACITIES AND SELECTION DATA

18K(Up to 2 indoor units series)

HEATING PERFORMANCE DATA

COMBINATION (%)	INDOOR DB(℃)	OUTDOOR WB(℃) 0 Q	0 INPUT	5 Q	5 INPUT	10 Q	10 INPUT	15 Q	15 INPUT	20 Q	20 INPUT
130%	15	5.40	1318	5.87	1387	6.34	1456	6.66	1500	6.86	1530
	16	5.34	1328	5.80	1398	6.26	1468	6.58	1512	6.77	1542
	17	5.27	1339	5.73	1409	6.19	1480	6.50	1524	6.69	1555
	18	5.21	1350	5.66	1421	6.12	1492	6.42	1537	6.61	1567
	19	5.15	1361	5.60	1432	6.04	1504	6.35	1549	6.54	1580
	20	5.10	1372	5.54	1444	5.98	1516	6.28	1561	6.47	1593
	21	5.04	1387	5.47	1460	5.91	1533	6.21	1579	6.39	1610
	22	4.98	1402	5.41	1476	5.84	1549	6.13	1596	6.32	1628
	23	4.92	1417	5.34	1492	5.77	1567	6.06	1614	6.24	1646
	24	4.86	1433	5.28	1508	5.70	1584	5.99	1631	6.17	1664
	25	4.80	1449	5.22	1525	5.63	1601	5.91	1649	6.09	1682
	26	4.74	1465	5.15	1542	5.57	1619	5.84	1667	6.02	1701
	27	4.68	1481	5.09	1559	5.50	1637	5.77	1686	5.95	1719
	28	4.63	1497	5.03	1576	5.43	1655	5.70	1704	5.88	1738
	29	4.57	1513	4.97	1593	5.37	1673	5.64	1723	5.80	1757
	30	4.52	1530	4.91	1611	5.30	1691	5.57	1742	5.74	1777

COMBINATION (%)	INDOOR DB(℃)	OUTDOOR WB(℃) 0 Q	0 INPUT	5 Q	5 INPUT	10 Q	10 INPUT	15 Q	15 INPUT	20 Q	20 INPUT
120%	15	5.24	1255	5.70	1321	6.15	1387	6.46	1429	6.66	1457
	16	5.18	1265	5.63	1332	6.08	1398	6.38	1440	6.58	1469
	17	5.12	1275	5.56	1342	6.01	1409	6.31	1452	6.50	1481
	18	5.06	1285	5.50	1353	5.94	1421	6.23	1463	6.42	1493
	19	5.00	1296	5.43	1364	5.87	1432	6.16	1475	6.35	1505
	20	4.95	1306	5.38	1375	5.81	1444	6.10	1487	6.28	1517
	21	4.89	1321	5.31	1390	5.74	1460	6.03	1503	6.21	1533
	22	4.83	1335	5.25	1405	5.67	1476	5.95	1520	6.13	1550
	23	4.77	1350	5.19	1421	5.60	1492	5.88	1537	6.06	1567
	24	4.72	1365	5.13	1437	5.54	1508	5.81	1554	5.99	1585
	25	4.66	1380	5.06	1452	5.47	1525	5.74	1571	5.91	1602
	26	4.60	1395	5.00	1468	5.40	1542	5.67	1588	5.84	1620
	27	4.55	1410	4.94	1484	5.34	1559	5.61	1605	5.77	1638
	28	4.49	1426	4.88	1501	5.27	1576	5.54	1623	5.70	1656
	29	4.44	1441	4.82	1517	5.21	1593	5.47	1641	5.64	1674
	30	4.39	1457	4.77	1534	5.15	1611	5.41	1659	5.57	1692

COMBINATION (%)	INDOOR DB(℃)	OUTDOOR WB(℃) 0 Q	0 INPUT	5 Q	5 INPUT	10 Q	10 INPUT	15 Q	15 INPUT	20 Q	20 INPUT
110%	15	5.09	1230	5.53	1295	5.97	1360	6.27	1401	6.46	1429
	16	5.03	1240	5.47	1305	5.90	1371	6.20	1412	6.38	1440
	17	4.97	1250	5.40	1316	5.83	1382	6.13	1423	6.31	1452
	18	4.91	1260	5.34	1327	5.76	1393	6.05	1435	6.23	1463
	19	4.85	1270	5.27	1337	5.70	1404	5.98	1446	6.16	1475
	20	4.80	1281	5.22	1348	5.64	1415	5.92	1458	6.10	1487
	21	4.75	1295	5.16	1363	5.57	1431	5.85	1474	6.03	1503
	22	4.69	1309	5.10	1378	5.51	1447	5.78	1490	5.95	1520
	23	4.63	1323	5.04	1393	5.44	1463	5.71	1507	5.88	1537
	24	4.58	1338	4.98	1408	5.37	1479	5.64	1523	5.81	1554
	25	4.52	1353	4.92	1424	5.31	1495	5.57	1540	5.74	1571
	26	4.47	1368	4.86	1439	5.25	1511	5.51	1557	5.67	1588
	27	4.42	1383	4.80	1455	5.18	1528	5.44	1574	5.61	1605
	28	4.36	1398	4.74	1471	5.12	1545	5.38	1591	5.54	1623
	29	4.31	1413	4.68	1488	5.06	1562	5.31	1609	5.47	1641
	30	4.26	1429	4.63	1504	5.00	1579	5.25	1626	5.41	1659

4. CAPACITIES AND SELECTION DATA

COMBINATION (%)	INDOOR DB(℃)	OUTDOOR WB(℃)									
		0		5		10		15		20	
		Q	INPUT	Q	INPUT	Q	INPUT	Q	INPUT	Q	INPUT
100%	15	4.94	1194	5.37	1257	5.80	1320	6.09	1360	6.27	1387
	16	4.88	1204	5.31	1267	5.73	1331	6.02	1371	6.20	1398
	17	4.82	1214	5.24	1278	5.66	1342	5.95	1382	6.13	1409
	18	4.77	1224	5.18	1288	5.60	1352	5.88	1393	6.05	1421
	19	4.71	1233	5.12	1298	5.53	1363	5.81	1404	5.98	1432
	20	4.66	1243	5.07	1309	5.48	1374	5.75	1415	5.92	1444
	21	4.61	1257	5.01	1323	5.41	1389	5.68	1431	5.85	1460
	22	4.55	1271	4.95	1338	5.34	1405	5.61	1447	5.78	1476
	23	4.50	1285	4.89	1352	5.28	1420	5.54	1463	5.71	1492
	24	4.44	1299	4.83	1367	5.22	1436	5.48	1479	5.64	1508
	25	4.39	1313	4.77	1382	5.15	1451	5.41	1495	5.57	1525
	26	4.34	1328	4.72	1398	5.09	1467	5.35	1511	5.51	1542
	27	4.29	1342	4.66	1413	5.03	1484	5.28	1528	5.44	1559
	28	4.23	1357	4.60	1428	4.97	1500	5.22	1545	5.38	1576
	29	4.18	1372	4.55	1444	4.91	1516	5.16	1562	5.31	1593
	30	4.13	1387	4.49	1460	4.85	1533	5.10	1579	5.25	1611

COMBINATION (%)	INDOOR DB(℃)	OUTDOOR WB(℃)									
		0		5		10		15		20	
		Q	INPUT	Q	INPUT	Q	INPUT	Q	INPUT	Q	INPUT
90%	15	4.77	1173	5.18	1235	5.60	1296	5.88	1335	6.05	1362
	16	4.71	1182	5.12	1245	5.53	1307	5.81	1346	5.98	1373
	17	4.66	1192	5.06	1255	5.47	1317	5.74	1357	5.91	1384
	18	4.60	1202	5.00	1265	5.40	1328	5.67	1368	5.84	1395
	19	4.55	1211	4.94	1275	5.34	1339	5.60	1379	5.77	1406
	20	4.50	1221	4.89	1285	5.28	1349	5.55	1390	5.71	1418
	21	4.45	1234	4.83	1299	5.22	1364	5.48	1405	5.65	1433
	22	4.39	1248	4.78	1314	5.16	1379	5.42	1421	5.58	1449
	23	4.34	1262	4.72	1328	5.10	1395	5.35	1436	5.51	1465
	24	4.29	1276	4.66	1343	5.03	1410	5.29	1452	5.45	1481
	25	4.24	1290	4.61	1357	4.97	1425	5.22	1468	5.38	1497
	26	4.19	1304	4.55	1372	4.91	1441	5.16	1484	5.32	1514
	27	4.14	1318	4.50	1388	4.86	1457	5.10	1501	5.25	1531
	28	4.09	1333	4.44	1403	4.80	1473	5.04	1517	5.19	1547
	29	4.04	1347	4.39	1418	4.74	1489	4.98	1534	5.13	1564
	30	3.99	1362	4.34	1434	4.68	1505	4.92	1551	5.06	1582

COMBINATION (%)	INDOOR DB(℃)	OUTDOOR WB(℃)									
		15	20	-15	-10	-5	0	5	10	15	20
		Q	INPUT	Q	INPUT	Q	INPUT	Q	INPUT	Q	INPUT
80%	15	4.63	1161	5.03	1222	5.43	1283	5.70	1322	5.87	1348
	16	4.57	1171	4.97	1232	5.37	1294	5.63	1333	5.80	1359
	17	4.52	1180	4.91	1242	5.30	1304	5.57	1343	5.73	1370
	18	4.46	1189	4.85	1252	5.24	1315	5.50	1354	5.67	1381
	19	4.41	1199	4.79	1262	5.18	1325	5.44	1365	5.60	1392
	20	4.37	1209	4.75	1272	5.13	1336	5.38	1376	5.54	1404
	21	4.31	1222	4.69	1286	5.06	1351	5.32	1391	5.48	1419
	22	4.26	1235	4.63	1301	5.00	1366	5.25	1407	5.41	1435
	23	4.21	1249	4.58	1315	4.94	1381	5.19	1422	5.35	1450
	24	4.16	1263	4.52	1329	4.88	1396	5.13	1438	5.28	1466
	25	4.11	1277	4.47	1344	4.83	1411	5.07	1453	5.22	1483
	26	4.06	1291	4.41	1359	4.77	1427	5.01	1469	5.16	1499
	27	4.01	1305	4.36	1374	4.71	1442	4.95	1486	5.09	1515
	28	3.96	1319	4.31	1389	4.65	1458	4.89	1502	5.03	1532
	29	3.92	1334	4.26	1404	4.60	1474	4.83	1518	4.97	1549
	30	3.87	1348	4.21	1419	4.54	1490	4.77	1535	4.91	1566

Remarks:
Q: Total Cooling Capacity (Gross) **kW**
INPUT: Power Input (including the compressor, evap. fan motor & cond. **W**
DB: Dry Bulb Temperature
WB: Wet Bulb Temperature

4. CAPACITIES AND SELECTION DATA

18K (Up to 3 indoor units series)

Cooling Operation PERFORMANCE DATA

OUTDOOR DB (°C)

COMBINATION (%)	IDDB (°C)	ID WB (°C)	-15				-7				0				10				15				21				25				27				30				35				40				45				50			
			Q	SHC	SHF	IPT	Q	SHC	SHF	IPT	Q	SHC	SHF	IPT	Q	SHC	SHF	IPT	Q	SHC	SHF	IPT	Q	SHC	SHF	IPT	Q	SHC	SHF	IPT	Q	SHC	SHF	IPT	Q	SHC	SHF	IPT	Q	SHC	SHF	IPT	Q	SHC	SHF	IPT	Q	SHC	SHF	IPT	Q	SHC	SHF	IPT
130%	21	18	5.34	3.79	0.71	914	5.28	3.75	0.71	922	5.23	3.71	0.71	931	5.16	3.66	0.71	938	5.11	3.63	0.71	943	5.05	3.59	0.71	975	4.98	3.54	0.71	1018	4.89	3.47	0.71	1087	4.78	3.39	0.71	1137	4.64	3.29	0.71	1180	4.26	3.02	0.71	1254	3.51	2.50	0.71	1302	2.90	2.06	0.71	1352
	21	20	5.56	3.28	0.59	937	5.50	3.25	0.59	946	5.44	3.21	0.59	954	5.37	3.17	0.59	962	5.32	3.14	0.59	967	5.26	3.10	0.59	998	5.19	3.06	0.59	1041	5.10	3.01	0.59	1110	4.98	2.94	0.59	1161	4.83	2.85	0.59	1204	4.44	2.62	0.59	1277	3.66	2.16	0.59	1325	3.02	1.78	0.59	1375
	22	18	5.50	4.13	0.75	923	5.45	4.08	0.75	932	5.39	4.04	0.75	940	5.32	3.99	0.75	948	5.27	3.95	0.75	953	5.21	3.91	0.75	984	5.14	3.85	0.75	1028	5.05	3.78	0.75	1098	4.93	3.70	0.75	1149	4.78	3.59	0.75	1192	4.39	3.29	0.75	1266	3.62	2.72	0.75	1315	2.99	2.24	0.75	1365
	22	20	5.67	3.57	0.63	947	5.61	3.54	0.63	955	5.55	3.50	0.63	964	5.48	3.45	0.63	972	5.43	3.42	0.63	976	5.37	3.38	0.63	1008	5.29	3.33	0.63	1052	5.20	3.28	0.63	1122	5.08	3.20	0.63	1172	4.93	3.11	0.63	1216	4.53	2.85	0.63	1290	3.73	2.35	0.63	1339	3.08	1.94	0.63	1389
	22	22	5.77	2.94	0.51	963	5.71	2.91	0.51	972	5.65	2.88	0.51	980	5.57	2.84	0.51	988	5.52	2.81	0.51	993	5.46	2.78	0.51	1024	5.38	2.75	0.51	1068	5.29	2.70	0.51	1138	5.16	2.63	0.51	1189	5.01	2.56	0.51	1232	4.60	2.35	0.51	1306	3.80	1.94	0.51	1355	3.13	1.60	0.51	1405
	23	18	5.61	4.43	0.79	932	5.56	4.39	0.79	941	5.50	4.34	0.79	950	5.43	4.29	0.79	957	5.37	4.24	0.79	962	5.31	4.20	0.79	994	5.24	4.14	0.79	1038	5.15	4.07	0.79	1109	5.03	3.97	0.79	1160	4.88	3.86	0.79	1204	4.48	3.54	0.79	1279	3.70	2.92	0.79	1328	3.05	2.41	0.79	1379
	23	20	5.79	3.88	0.67	956	5.73	3.84	0.67	965	5.67	3.80	0.67	974	5.59	3.75	0.67	981	5.54	3.71	0.67	986	5.48	3.67	0.67	1018	5.40	3.62	0.67	1062	5.31	3.55	0.67	1133	5.18	3.47	0.67	1184	5.03	3.37	0.67	1228	4.62	3.09	0.67	1303	3.81	2.55	0.67	1352	3.14	2.11	0.67	1403
	23	22	5.88	3.24	0.55	973	5.83	3.20	0.55	981	5.76	3.17	0.55	990	5.69	3.13	0.55	998	5.63	3.10	0.55	1003	5.57	3.06	0.55	1035	5.49	3.02	0.55	1079	5.40	2.97	0.55	1149	5.27	2.90	0.55	1201	5.12	2.81	0.55	1244	4.70	2.58	0.55	1320	3.87	2.13	0.55	1369	3.20	1.76	0.55	1419
	24	18	5.73	4.75	0.83	942	5.67	4.71	0.83	951	5.61	4.66	0.83	959	5.54	4.60	0.83	967	5.48	4.55	0.83	972	5.42	4.50	0.83	1004	5.35	4.44	0.83	1049	5.25	4.36	0.83	1120	5.13	4.26	0.83	1172	4.98	4.13	0.83	1216	4.57	3.80	0.83	1292	3.77	3.13	0.83	1342	3.11	2.58	0.83	1393
	24	20	5.90	4.19	0.71	966	5.84	4.15	0.71	975	5.78	4.10	0.71	983	5.71	4.05	0.71	991	5.65	4.01	0.71	996	5.59	3.97	0.71	1029	5.51	3.91	0.71	1073	5.41	3.84	0.71	1144	5.29	3.75	0.71	1196	5.13	3.64	0.71	1240	4.71	3.35	0.71	1316	3.89	2.76	0.71	1366	3.21	2.28	0.71	1417
	24	22	6.00	3.54	0.59	983	5.94	3.51	0.59	991	5.88	3.47	0.59	1000	5.80	3.42	0.59	1008	5.75	3.39	0.59	1013	5.68	3.35	0.59	1045	5.61	3.31	0.59	1090	5.51	3.25	0.59	1161	5.38	3.17	0.59	1213	5.22	3.08	0.59	1257	4.79	2.83	0.59	1333	3.95	2.33	0.59	1382	3.26	1.92	0.59	1434
	24	24	6.09	2.86	0.47	1002	6.03	2.83	0.47	1011	5.96	2.80	0.47	1019	5.89	2.77	0.47	1027	5.83	2.74	0.47	1032	5.76	2.71	0.47	1065	5.68	2.67	0.47	1109	5.58	2.62	0.47	1180	5.45	2.56	0.47	1232	5.29	2.49	0.47	1276	4.86	2.28	0.47	1352	4.01	1.88	0.47	1402	3.31	1.55	0.47	1453
	25	18	5.90	5.14	0.87	951	5.85	5.09	0.87	960	5.78	5.03	0.87	969	5.71	4.97	0.87	977	5.65	4.92	0.87	982	5.59	4.86	0.87	1015	5.51	4.80	0.87	1059	5.42	4.71	0.87	1131	5.29	4.60	0.87	1184	5.13	4.47	0.87	1228	4.71	4.10	0.87	1305	3.89	3.38	0.87	1355	3.21	2.79	0.87	1407
	25	20	6.09	4.56	0.75	976	6.03	4.52	0.75	985	5.96	4.47	0.75	993	5.88	4.41	0.75	1001	5.83	4.37	0.75	1006	5.76	4.32	0.75	1039	5.68	4.26	0.75	1084	5.58	4.19	0.75	1156	5.45	4.09	0.75	1208	5.29	3.97	0.75	1253	4.86	3.64	0.75	1330	4.01	3.01	0.75	1380	3.31	2.48	0.75	1432
	25	22	6.19	3.90	0.63	993	6.13	3.86	0.63	1001	6.06	3.82	0.63	1010	5.98	3.77	0.63	1018	5.92	3.73	0.63	1023	5.86	3.69	0.63	1056	5.78	3.64	0.63	1101	5.68	3.58	0.63	1173	5.54	3.49	0.63	1225	5.38	3.39	0.63	1270	4.94	3.11	0.63	1346	4.08	2.57	0.63	1396	3.36	2.12	0.63	1448
	25	24	6.28	3.20	0.51	1012	6.21	3.17	0.51	1021	6.15	3.13	0.51	1030	6.07	3.09	0.51	1038	6.01	3.06	0.51	1043	5.94	3.03	0.51	1075	5.86	2.99	0.51	1120	5.76	2.94	0.51	1192	5.62	2.87	0.51	1245	5.46	2.78	0.51	1289	5.01	2.56	0.51	1366	4.13	2.11	0.51	1416	3.41	1.74	0.51	1468
	26	18	6.09	5.54	0.91	961	6.03	5.48	0.91	970	5.96	5.43	0.91	979	5.89	5.36	0.91	987	5.83	5.30	0.91	992	5.76	5.24	0.91	1025	5.68	5.17	0.91	1070	5.58	5.08	0.91	1143	5.45	4.96	0.91	1196	5.29	4.82	0.91	1241	4.86	4.42	0.91	1318	4.01	3.65	0.91	1369	3.31	3.01	0.91	1421
	26	20	6.27	4.96	0.79	986	6.21	4.91	0.79	995	6.14	4.85	0.79	1003	6.07	4.79	0.79	1011	6.01	4.74	0.79	1016	5.94	4.69	0.79	1050	5.86	4.63	0.79	1095	5.75	4.55	0.79	1168	5.62	4.44	0.79	1221	5.46	4.31	0.79	1266	5.01	3.96	0.79	1343	4.13	3.26	0.79	1394	3.41	2.69	0.79	1446
	26	22	6.38	4.27	0.67	1003	6.32	4.23	0.67	1011	6.25	4.19	0.67	1020	6.17	4.13	0.67	1028	6.11	4.09	0.67	1033	6.04	4.05	0.67	1066	5.96	3.99	0.67	1112	5.85	3.92	0.67	1184	5.71	3.83	0.67	1237	5.55	3.72	0.67	1282	5.09	3.41	0.67	1360	4.20	2.82	0.67	1410	3.47	2.32	0.67	1463
	26	24	6.47	3.56	0.55	1022	6.41	3.52	0.55	1031	6.34	3.48	0.55	1040	6.25	3.44	0.55	1048	6.19	3.41	0.55	1053	6.13	3.37	0.55	1086	6.04	3.32	0.55	1132	5.93	3.26	0.55	1204	5.79	3.19	0.55	1257	5.63	3.09	0.55	1302	5.16	2.84	0.55	1380	4.26	2.34	0.55	1430	3.52	1.93	0.55	1483
	26	26	6.57	2.83	0.43	1045	6.51	2.80	0.43	1054	6.44	2.77	0.43	1063	6.35	2.73	0.43	1071	6.29	2.71	0.43	1076	6.22	2.68	0.43	1109	6.14	2.64	0.43	1154	6.03	2.59	0.43	1227	5.89	2.53	0.43	1280	5.72	2.46	0.43	1325	5.25	2.26	0.43	1403	4.33	1.86	0.43	1453	3.57	1.54	0.43	1505
	27	18	6.21	5.90	0.95	971	6.15	5.84	0.95	980	6.08	5.78	0.95	989	6.01	5.70	0.95	997	5.95	5.65	0.95	1002	5.88	5.59	0.95	1035	5.80	5.51	0.95	1081	5.70	5.41	0.95	1154	5.56	5.29	0.95	1208	5.40	5.13	0.95	1253	4.96	4.71	0.95	1332	4.09	3.89	0.95	1383	3.38	3.21	0.95	1436
	27	19	6.34	5.64	0.89	981	6.28	5.59	0.89	990	6.21	5.52	0.89	999	6.13	5.45	0.89	1007	6.07	5.40	0.89	1012	6.00	5.34	0.89	1045	5.92	5.27	0.89	1091	5.81	5.17	0.89	1164	5.68	5.05	0.89	1218	5.51	4.91	0.89	1263	5.06	4.50	0.89	1342	4.17	3.72	0.89	1393	3.44	3.07	0.89	1446
	27	20	6.40	5.31	0.83	996	6.34	5.26	0.83	1005	6.27	5.20	0.83	1014	6.19	5.14	0.83	1022	6.13	5.09	0.83	1027	6.06	5.03	0.83	1060	5.98	4.96	0.83	1106	5.87	4.87	0.83	1179	5.73	4.76	0.83	1233	5.57	4.62	0.83	1278	5.11	4.24	0.83	1357	4.22	3.50	0.83	1408	3.48	2.89	0.83	1461
	27	22	6.51	4.62	0.71	1013	6.45	4.58	0.71	1022	6.38	4.53	0.71	1031	6.29	4.47	0.71	1039	6.23	4.42	0.71	1044	6.16	4.38	0.71	1077	6.08	4.32	0.71	1123	5.97	4.24	0.71	1196	5.83	4.14	0.71	1250	5.66	4.02	0.71	1295	5.20	3.69	0.71	1374	4.29	3.04	0.71	1425	3.54	2.51	0.71	1478
	27	24	6.60	3.90	0.59	1033	6.54	3.86	0.59	1042	6.47	3.81	0.59	1051	6.38	3.77	0.59	1059	6.32	3.73	0.59	1064	6.25	3.69	0.59	1097	6.16	3.64	0.59	1143	6.06	3.57	0.59	1216	5.91	3.49	0.59	1270	5.74	3.39	0.59	1315	5.27	3.11	0.59	1394	4.35	2.57	0.59	1445	3.59	2.12	0.59	1498
	27	26	6.71	3.15	0.47	1056	6.64	3.12	0.47	1065	6.57	3.09	0.47	1074	6.48	3.05	0.47	1082	6.42	3.02	0.47	1087	6.35	2.98	0.47	1120	6.26	2.94	0.47	1166	6.15	2.89	0.47	1239	6.01	2.82	0.47	1293	5.83	2.74	0.47	1338	5.35	2.52	0.47	1417	4.42	2.08	0.47	1468	3.64	1.71	0.47	1521
	28	18	6.27	6.21	0.99	980	6.21	6.15	0.99	989	6.14	6.08	0.99	998	6.07	6.00	0.99	1007	6.01	5.95	0.99	1012	5.94	5.88	0.99	1046	5.86	5.80	0.99	1092	5.75	5.70	0.99	1166	5.62	5.56	0.99	1220	5.46	5.40	0.99	1266	5.01	4.96	0.99	1345	4.13	4.09	0.99	1397	3.41	3.37	0.99	1450
	28	20	6.40	5.57	0.87	1006	6.34	5.51	0.87	1015	6.27	5.45	0.87	1024	6.19	5.38	0.87	1032	6.13	5.33	0.87	1037	6.06	5.27	0.87	1071	5.98	5.20	0.87	1117	5.87	5.11	0.87	1191	5.73	4.99	0.87	1245	5.57	4.84	0.87	1291	5.11	4.45	0.87	1370	4.22	3.67	0.87	1422	3.48	3.03	0.87	1475
	28	22	6.47	4.85	0.75	1023	6.40	4.80	0.75	1032	6.33	4.75	0.75	1041	6.25	4.69	0.75	1049	6.19	4.64	0.75	1054	6.12	4.59	0.75	1088	6.04	4.53	0.75	1134	5.93	4.45	0.75	1208	5.79	4.34	0.75	1262	5.62	4.22	0.75	1308	5.16	3.87	0.75	1387	4.26	3.19	0.75	1439	3.51	2.63	0.75	1492
	28	24	6.58	4.14	0.63	1043	6.51	4.10	0.63	1052	6.44	4.06	0.63	1061	6.36	4.01	0.63	1069	6.29	3.97	0.63	1074	6.23	3.92	0.63	1108	6.14	3.87	0.63	1154	6.03	3.80	0.63	1228	5.89	3.71	0.63	1283	5.72	3.60	0.63	1329	5.25	3.31	0.63	1408	4.33	2.73	0.63	1459	3.57	2.25	0.63	1513
	28	26	6.67	3.40	0.51	1066	6.60	3.37	0.51	1075	6.53	3.33	0.51	1084	6.45	3.29	0.51	1092	6.38	3.26	0.51	1098	6.31	3.22	0.51	1131	6.23	3.18	0.51	1178	6.12	3.12	0.51	1252	5.97	3.05	0.51	1306	5.80	2.96	0.51	1352	5.32	2.71	0.51	1431	4.39	2.24	0.51	1482	3.62	1.85	0.51	1536
	29	18	6.34	6.40	1.01	990	6.27	6.34	1.01	999	6.21	6.27	1.01	1008	6.13	6.19	1.01	1017	6.07	6.13	1.01	1022	6.00	6.06	1.01	1056	5.92	5.98	1.01	1103	5.81	5.87	1.01	1178	5.68	5.73	1.01	1232	5.51	5.57	1.01	1279	5.06	5.11	1.01	1359	4.17	4.21	1.01	1411	3.44	3.48	1.01	1465
	29	20	6.47	5.88	0.91	1016	6.40	5.83	0.91	1025	6.33	5.76	0.91	1034	6.25	5.69	0.91	1042	6.19	5.63	0.91	1047	6.12	5.57	0.91	1081	6.04	5.49	0.91	1128	5.93	5.40	0.91	1203	5.79	5.27	0.91	1258	5.62	5.12	0.91	1304	5.16	4.70	0.91	1384	4.26	3.88	0.91	1436	3.51	3.20	0.91	1490
	29	22	6.60	5.21	0.79	1033	6.53	5.16	0.79	1042	6.46	5.10	0.79	1051	6.38	5.04	0.79	1060	6.31	4.99	0.79	1065	6.24	4.93	0.79	1099	6.16	4.86	0.79	1146	6.05	4.78	0.79	1220	5.91	4.67	0.79	1275	5.74	4.53	0.79	1321	5.26	4.16	0.79	1401	4.34	3.43	0.79	1453	3.58	2.83	0.79	1507
	29	24	6.64	4.45	0.67	1053	6.58	4.41	0.67	1063	6.50	4.36	0.67	1072	6.42	4.30	0.67	1080	6.36	4.26	0.67	1085	6.29	4.21	0.67	1119	6.20	4.15	0.67	1166	6.09	4.08	0.67	1241	5.95	3.99	0.67	1295	5.78	3.87	0.67	1342	5.30	3.55	0.67	1422	4.37	2.93	0.67	1474	3.61	2.42	0.67	1528
	29	26	6.73	3.70	0.55	1077	6.67	3.67	0.55	1086	6.60	3.63	0.55	1095	6.51	3.58	0.55	1103	6.45	3.55	0.55	1109	6.38	3.51	0.55	1143	6.29	3.46	0.55	1189	6.18	3.40	0.55	1264	6.03	3.32	0.55	1319	5.86	3.22	0.55	1365	5.38	2.96	0.55	1445	4.44	2.44	0.55	1497	3.66	2.01	0.55	1551
	30	18	6.40	6.46	1.01	1000	6.34	6.40	1.01	1009	6.27	6.33	1.01	1019	6.19	6.25	1.01	1027	6.13	6.19	1.01	1032	6.06	6.12	1.01	1067	5.98	6.04	1.01	1114	5.87	5.93	1.01	1189	5.73	5.79	1.01	1245	5.57	5.62	1.01	1291	5.11	5.16	1.01	1372	4.21	4.26	1.01	1425	3.48	3.51	1.01	1479
	30	20	6.53	6.20	0.95	1026	6.47	6.14	0.95	1035	6.40	6.08	0.95	1044	6.31	6.00	0.95	1053	6.25	5.94	0.95	1058	6.18	5.87	0.95	1092	6.10	5.79	0.95	1139	5.99	5.69	0.95	1215	5.85	5.56	0.95	1270	5.68	5.40	0.95	1317	5.21	4.95	0.95	1398	4.30	4.09	0.95	1450	3.55	3.37	0.95	1505
	30	22	6.66	5.53	0.83	1043	6.60	5.47	0.83	1053	6.52	5.41	0.83	1062	6.44	5.34	0.83	1070	6.38	5.29	0.83	1075	6.31	5.23	0.83	1110	6.22	5.16	0.83	1157	6.11	5.07	0.83	1233	5.97	4.95	0.83	1288	5.79	4.81	0.83	1335	5.32	4.41	0.83	1415	4.39	3.64	0.83	1468	3.62	3.00	0.83	1522
	30	24	6.71	4.76	0.71	1064	6.64	4.72	0.71	1073	6.57	4.66	0.71	1082	6.49	4.60	0.71	1091	6.42	4.56	0.71	1096	6.35	4.51	0.71	1130	6.26	4.45	0.71	1178	6.15	4.37	0.71	1253	6.01	4.27	0.71	1308	5.83	4.14	0.71	1355	5.35	3.80	0.71	1436	4.42	3.14	0.71	1488	3.64	2.59	0.71	1543
	30	26	6.80	4.01	0.59	1088	6.73	3.97	0.59	1097	6.66	3.93	0.59	1106	6.58	3.88	0.59	1114	6.51	3.84	0.59	1120	6.44	3.80	0.59	1154	6.35	3.75	0.59	1201	6.24	3.68	0.59	1277	6.09	3.59	0.59	1332	5.91	3.49	0.59	1379	5.43	3.20	0.59	1460	4.48	2.64	0.59	1512	3.70	2.18	0.59	1567
	31	18	6.46	6.53	1.01	1010	6.40	6.46	1.01	1019	6.33	6.39	1.01	1029	6.25	6.31	1.01	1037	6.19	6.25	1.01	1042	6.12	6.18	1.01	1077	6.04	6.10	1.01	1125	5.93	5.99	1.01	1201	5.79	5.85	1.01	1257	5.62	5.68	1.01	1304	5.16	5.21	1.01	1386	4.26	4.30	1.01	1439	3.51	3.55	1.01	1494
	31	20	6.60	6.53	0.99	1036	6.53	6.47	0.99	1045	6.46	6.39	0.99	1055	6.38	6.31	0.99	1063	6.31	6.25	0.99	1068	6.24	6.18	0.99	1103	6.16	6.10	0.99	1151	6.05	5.99	0.99	1227	5.91	5.85	0.99	1283	5.74	5.68	0.99	1330	5.27	5.21	0.99	1412	4.34	4.30	0.99	1465	3.58	3.55	0.99	1520
	31	22	6.73	5.85	0.87	1054	6.66	5.80	0.87	1063	6.59	5.73	0.87	1072	6.50	5.66	0.87	1081	6.44	5.60	0.87	1086	6.37	5.54	0.87	1121	6.28	5.47	0.87	1169	6.17	5.37	0.87	1245	6.03	5.24	0.87	1301	5.85	5.09	0.87	1348	5.37	4.67	0.87	1430	4.43	3.85	0.87	1483	3.66	3.18	0.87	1538
	31	24	6.78	5.08	0.75	1075	6.71	5.03	0.75	1084	6.64	4.98	0.75	1093	6.55	4.91	0.75	1102	6.49	4.86	0.75	1107	6.41	4.81	0.75	1142	6.33	4.74	0.75	1189	6.21	4.66	0.75	1266	6.07	4.55	0.75	1321	5.89	4.42	0.75	1369	5.41	4.06	0.75	1450	4.46	3.35	0.75	1503	3.68	2.76	0.75	1558
	31	26	6.87	4.33	0.63	1099	6.80	4.29	0.63	1108	6.73	4.24	0.63	1117	6.64	4.18	0.63	1126	6.58	4.14	0.63	1131	6.50	4.10	0.63	1166	6.41	4.04	0.63	1213	6.30	3.97	0.63	1290	6.15	3.88	0.63	1345	5.97	3.76	0.63	1393	5.48	3.46	0.63	1474	4.52	2.85	0.63	1527	3.73	2.35	0.63	1582
	32	18	6.53	6.59	1.01	1020	6.46	6.53	1.01	1030	6.39	6.46	1.01	1039	6.31	6.37	1.01	1047	6.25	6.31	1.01	1053	6.18	6.24	1.01	1088	6.10	6.16	1.01	1136	5.99	6.05	1.01	1213	5.85	5.91	1.01	1270	5.68	5.73	1.01	1317	5.21	5.26	1.01	1400	4.30	4.34	1.01	1453	3.55	3.58	1.01	1509
	32	20	6.66	6.73	1.01	1046	6.60	6.66	1.01	1056	6.52	6.59	1.01	1065	6.44	6.50	1.01	1074	6.38	6.44	1.01	1079	6.31	6.37	1.01	1114	6.22	6.28	1.01	1162	6.11	6.17	1.01	1239	5.97	6.03	1.01	1296	5.79	5.85	1.01	1344	5.32	5.37	1.01	1426	4.39	4.43	1.01	1480	3.62	3.66	1.01	1535
	32	22	6.80	6.18	0.91	1064	6.73	6.12	0.91	1074	6.65	6.06	0.91	1083	6.57	5.98	0.91	1092	6.50	5.92	0.91	1097	6.43	5.85	0.91	1132	6.34	5.77	0.91	1180	6.23	5.67	0.91	1257	6.09	5.54	0.91	1314	5.91	5.38	0.91	1361	5.42	4.94	0.91	1444	4.48	4.07	0.91	1497	3.69	3.36	0.91	1553
	32	24	6.84	5.41	0.79	1085	6.78	5.35	0.79	1095	6.70	5.29	0.79

4. CAPACITIES AND SELECTION DATA

| | | | Cooling Operation PERFORMANCE DATA | | |

4. CAPACITIES AND SELECTION DATA

Cooling Operation PERFORMANCE DATA

COMBINATION (%)	IDDB (°C)	IDWB (°C)	OUTDOOR DB (°C) -15 Q	-15 SHC	-15 SHF	-15 IPT	-7 Q	-7 SHC	-7 SHF	-7 IPT	0 Q	0 SHC	0 SHF	0 IPT	10 Q	10 SHC	10 SHF	10 IPT	15 Q	15 SHC	15 SHF	15 IPT	21 Q	21 SHC	21 SHF	21 IPT	25 Q	25 SHC	25 SHF	25 IPT	27 Q	27 SHC	27 SHF	27 IPT	30 Q	30 SHC	30 SHF	30 IPT	35 Q	35 SHC	35 SHF	35 IPT	40 Q	40 SHC	40 SHF	40 IPT	45 Q	45 SHC	45 SHF	45 IPT	50 Q	50 SHC	50 SHF	50 IPT
110%	21	18	5.18	3.68	0.71	896	5.13	3.64	0.71	904	5.08	3.61	0.71	913	5.01	3.56	0.71	920	4.96	3.52	0.71	925	4.91	3.49	0.71	956	4.84	3.44	0.71	998	4.76	3.38	0.71	1066	4.64	3.30	0.71	1115	4.51	3.20	0.71	1157	4.14	2.94	0.71	1230	3.41	2.42	0.71	1277	2.82	2.00	0.71	1326
	21	20	5.40	3.19	0.59	920	5.35	3.15	0.59	928	5.29	3.12	0.59	936	5.22	3.08	0.59	944	5.17	3.05	0.59	948	5.11	3.02	0.59	979	5.04	2.97	0.59	1022	4.95	2.92	0.59	1089	4.84	2.85	0.59	1139	4.69	2.77	0.59	1181	4.31	2.54	0.59	1253	3.56	2.10	0.59	1300	2.93	1.73	0.59	1349
	22	18	5.35	4.01	0.75	905	5.29	3.97	0.75	914	5.23	3.93	0.75	922	5.17	3.88	0.75	929	5.12	3.84	0.75	934	5.06	3.80	0.75	965	4.99	3.74	0.75	1008	4.90	3.68	0.75	1077	4.79	3.59	0.75	1127	4.65	3.49	0.75	1169	4.27	3.20	0.75	1242	3.52	2.64	0.75	1290	2.90	2.18	0.75	1339
	22	20	5.51	3.47	0.63	929	5.45	3.44	0.63	937	5.39	3.40	0.63	946	5.33	3.36	0.63	953	5.27	3.32	0.63	958	5.22	3.29	0.63	989	5.14	3.24	0.63	1032	5.05	3.18	0.63	1100	4.93	3.11	0.63	1150	4.79	3.02	0.63	1193	4.40	2.77	0.63	1266	3.63	2.29	0.63	1313	2.99	1.89	0.63	1363
	22	22	5.60	2.86	0.51	945	5.55	2.83	0.51	954	5.49	2.80	0.51	962	5.42	2.76	0.51	969	5.36	2.73	0.51	974	5.30	2.71	0.51	1005	5.23	2.67	0.51	1048	5.14	2.62	0.51	1117	5.02	2.56	0.51	1166	4.87	2.48	0.51	1209	4.47	2.28	0.51	1282	3.69	1.88	0.51	1330	3.04	1.55	0.51	1379
	23	18	5.45	4.31	0.79	914	5.40	4.27	0.79	923	5.34	4.22	0.79	931	5.27	4.17	0.79	939	5.22	4.12	0.79	944	5.16	4.08	0.79	975	5.09	4.02	0.79	1018	5.00	3.95	0.79	1087	4.89	3.86	0.79	1138	4.74	3.75	0.79	1181	4.35	3.44	0.79	1255	3.59	2.84	0.79	1303	2.96	2.34	0.79	1352
	23	20	5.62	3.77	0.67	938	5.57	3.73	0.67	947	5.51	3.69	0.67	955	5.43	3.64	0.67	963	5.38	3.61	0.67	968	5.32	3.57	0.67	999	5.25	3.52	0.67	1042	5.16	3.45	0.67	1111	5.03	3.37	0.67	1162	4.89	3.28	0.67	1205	4.49	3.01	0.67	1279	3.70	2.48	0.67	1327	3.05	2.05	0.67	1377
	23	22	5.72	3.14	0.55	955	5.66	3.11	0.55	963	5.60	3.08	0.55	972	5.53	3.04	0.55	979	5.47	3.01	0.55	984	5.41	2.98	0.55	1016	5.34	2.94	0.55	1059	5.24	2.88	0.55	1128	5.12	2.82	0.55	1178	4.97	2.73	0.55	1221	4.56	2.51	0.55	1295	3.77	2.07	0.55	1343	3.11	1.71	0.55	1393
	24	18	5.57	4.62	0.83	924	5.51	4.57	0.83	932	5.45	4.52	0.83	941	5.38	4.47	0.83	948	5.33	4.42	0.83	953	5.27	4.37	0.83	985	5.20	4.31	0.83	1029	5.10	4.24	0.83	1098	4.99	4.14	0.83	1149	4.84	4.02	0.83	1193	4.44	3.69	0.83	1267	3.67	3.04	0.83	1316	3.02	2.51	0.83	1366
	24	20	5.74	4.07	0.71	948	5.68	4.03	0.71	956	5.62	3.99	0.71	965	5.55	3.94	0.71	973	5.49	3.90	0.71	977	5.43	3.86	0.71	1009	5.36	3.80	0.71	1053	5.26	3.74	0.71	1123	5.14	3.65	0.71	1174	4.99	3.54	0.71	1217	4.58	3.25	0.71	1292	3.78	2.68	0.71	1340	3.12	2.21	0.71	1390
	24	22	5.83	3.44	0.59	964	5.78	3.41	0.59	973	5.71	3.37	0.59	981	5.64	3.33	0.59	989	5.58	3.29	0.59	994	5.52	3.26	0.59	1026	5.45	3.21	0.59	1069	5.35	3.16	0.59	1139	5.23	3.08	0.59	1190	5.07	2.99	0.59	1233	4.66	2.75	0.59	1308	3.84	2.27	0.59	1357	3.17	1.87	0.59	1407
	24	24	5.92	2.78	0.47	984	5.86	2.75	0.47	992	5.79	2.72	0.47	1001	5.72	2.69	0.47	1009	5.66	2.66	0.47	1013	5.60	2.63	0.47	1045	5.52	2.60	0.47	1089	5.43	2.55	0.47	1159	5.30	2.49	0.47	1210	5.14	2.42	0.47	1253	4.72	2.22	0.47	1327	3.90	1.83	0.47	1376	3.21	1.51	0.47	1426
	25	18	5.74	4.99	0.87	933	5.68	4.94	0.87	942	5.62	4.89	0.87	950	5.55	4.83	0.87	958	5.49	4.78	0.87	963	5.43	4.73	0.87	995	5.36	4.66	0.87	1039	5.26	4.58	0.87	1110	5.14	4.47	0.87	1161	4.99	4.34	0.87	1205	4.58	3.98	0.87	1280	3.78	3.29	0.87	1329	3.12	2.71	0.87	1380
	25	20	5.91	4.44	0.75	957	5.85	4.39	0.75	966	5.79	4.34	0.75	975	5.72	4.29	0.75	982	5.66	4.25	0.75	987	5.60	4.20	0.75	1019	5.52	4.14	0.75	1064	5.42	4.07	0.75	1134	5.30	3.97	0.75	1186	5.14	3.86	0.75	1229	4.72	3.54	0.75	1305	3.89	2.92	0.75	1354	3.21	2.41	0.75	1404
	25	22	6.01	3.79	0.63	974	5.95	3.75	0.63	983	5.89	3.71	0.63	991	5.81	3.66	0.63	999	5.76	3.63	0.63	1004	5.69	3.59	0.63	1036	5.62	3.54	0.63	1080	5.52	3.48	0.63	1151	5.39	3.39	0.63	1202	5.23	3.29	0.63	1246	4.80	3.02	0.63	1321	3.96	2.50	0.63	1370	3.27	2.06	0.63	1421
	25	24	6.10	3.11	0.51	994	6.04	3.08	0.51	1002	5.97	3.05	0.51	1011	5.90	3.01	0.51	1019	5.84	2.98	0.51	1024	5.77	2.94	0.51	1056	5.69	2.90	0.51	1100	5.59	2.85	0.51	1170	5.46	2.79	0.51	1222	5.30	2.70	0.51	1266	4.87	2.48	0.51	1341	4.02	2.05	0.51	1390	3.31	1.69	0.51	1441
	26	18	5.92	5.38	0.91	942	5.86	5.33	0.91	951	5.79	5.27	0.91	960	5.72	5.20	0.91	968	5.66	5.15	0.91	973	5.60	5.10	0.91	1005	5.52	5.03	0.91	1049	5.43	4.94	0.91	1121	5.30	4.82	0.91	1173	5.14	4.68	0.91	1217	4.72	4.30	0.91	1293	3.90	3.55	0.91	1343	3.21	2.92	0.91	1394
	26	20	6.10	4.82	0.79	967	6.04	4.77	0.79	976	5.97	4.72	0.79	985	5.89	4.66	0.79	992	5.84	4.61	0.79	997	5.77	4.56	0.79	1030	5.69	4.50	0.79	1074	5.59	4.42	0.79	1145	5.46	4.31	0.79	1198	5.30	4.19	0.79	1242	4.87	3.84	0.79	1318	4.01	3.17	0.79	1367	3.31	2.62	0.79	1419
	26	22	6.20	4.15	0.67	984	6.14	4.11	0.67	993	6.07	4.07	0.67	1001	5.99	4.02	0.67	1009	5.93	3.98	0.67	1014	5.87	3.93	0.67	1047	5.79	3.88	0.67	1091	5.69	3.81	0.67	1162	5.55	3.72	0.67	1214	5.39	3.61	0.67	1259	4.95	3.32	0.67	1335	4.08	2.74	0.67	1384	3.37	2.26	0.67	1435
	26	24	6.29	3.46	0.55	1004	6.22	3.42	0.55	1012	6.16	3.39	0.55	1021	6.08	3.34	0.55	1029	6.02	3.31	0.55	1034	5.95	3.27	0.55	1066	5.87	3.23	0.55	1111	5.77	3.17	0.55	1182	5.63	3.10	0.55	1234	5.47	3.01	0.55	1278	5.02	2.76	0.55	1354	4.14	2.28	0.55	1404	3.42	1.88	0.55	1455
	26	26	6.39	2.75	0.43	1027	6.32	2.72	0.43	1035	6.26	2.69	0.43	1044	6.17	2.66	0.43	1052	6.11	2.63	0.43	1057	6.05	2.60	0.43	1089	5.96	2.56	0.43	1134	5.86	2.52	0.43	1205	5.72	2.46	0.43	1257	5.55	2.39	0.43	1301	5.10	2.19	0.43	1377	4.21	1.81	0.43	1427	3.47	1.49	0.43	1478
	27	18	6.04	5.73	0.95	952	5.98	5.68	0.95	961	5.91	5.62	0.95	969	5.84	5.54	0.95	977	5.78	5.49	0.95	982	5.71	5.43	0.95	1015	5.64	5.35	0.95	1060	5.54	5.26	0.95	1132	5.41	5.14	0.95	1185	5.25	4.99	0.95	1229	4.82	4.58	0.95	1306	3.98	3.78	0.95	1356	3.28	3.12	0.95	1408
	27	19	6.16	5.48	0.89	962	6.10	5.43	0.89	971	6.03	5.37	0.89	979	5.95	5.30	0.89	987	5.90	5.25	0.89	992	5.83	5.19	0.89	1025	5.75	5.12	0.89	1070	5.65	5.03	0.89	1142	5.52	4.91	0.89	1195	5.36	4.77	0.89	1239	4.92	4.38	0.89	1316	4.06	3.61	0.89	1366	3.35	2.98	0.89	1418
	27	20	6.22	5.16	0.83	977	6.16	5.11	0.83	986	6.09	5.06	0.83	994	6.01	4.99	0.83	1002	5.95	4.94	0.83	1007	5.89	4.89	0.83	1040	5.81	4.82	0.83	1085	5.71	4.74	0.83	1157	5.57	4.62	0.83	1210	5.41	4.49	0.83	1254	4.97	4.12	0.83	1331	4.10	3.40	0.83	1381	3.38	2.81	0.83	1433
	27	22	6.33	4.49	0.71	994	6.26	4.45	0.71	1003	6.20	4.40	0.71	1011	6.12	4.34	0.71	1019	6.06	4.30	0.71	1024	5.99	4.25	0.71	1057	5.91	4.19	0.71	1102	5.80	4.12	0.71	1174	5.67	4.02	0.71	1227	5.50	3.91	0.71	1271	5.05	3.59	0.71	1348	4.17	2.96	0.71	1398	3.44	2.44	0.71	1450
	27	24	6.42	3.78	0.59	1014	6.35	3.75	0.59	1023	6.28	3.71	0.59	1031	6.20	3.66	0.59	1039	6.14	3.62	0.59	1044	6.07	3.58	0.59	1077	5.99	3.53	0.59	1122	5.88	3.47	0.59	1194	5.75	3.39	0.59	1247	5.58	3.29	0.59	1291	5.12	3.02	0.59	1368	4.22	2.49	0.59	1418	3.49	2.06	0.59	1470
	27	26	6.52	3.06	0.47	1037	6.45	3.03	0.47	1046	6.38	3.00	0.47	1054	6.30	2.96	0.47	1062	6.24	2.93	0.47	1067	6.17	2.90	0.47	1100	6.09	2.86	0.47	1145	5.98	2.81	0.47	1217	5.84	2.74	0.47	1270	5.67	2.66	0.47	1314	5.20	2.45	0.47	1391	4.29	2.02	0.47	1441	3.54	1.66	0.47	1493
	28	18	6.10	6.04	0.99	961	6.04	5.98	0.99	970	5.97	5.91	0.99	979	5.89	5.83	0.99	987	5.84	5.78	0.99	992	5.77	5.71	0.99	1025	5.69	5.64	0.99	1071	5.59	5.54	0.99	1143	5.46	5.41	0.99	1196	5.30	5.25	0.99	1242	4.87	4.82	0.99	1319	4.01	3.97	0.99	1370	3.31	3.28	0.99	1422
	28	20	6.22	5.41	0.87	987	6.16	5.36	0.87	996	6.09	5.30	0.87	1004	6.01	5.23	0.87	1012	5.95	5.18	0.87	1017	5.89	5.12	0.87	1051	5.81	5.05	0.87	1096	5.71	4.96	0.87	1169	5.57	4.85	0.87	1222	5.41	4.71	0.87	1267	4.97	4.32	0.87	1344	4.10	3.56	0.87	1395	3.38	2.94	0.87	1447
	28	22	6.28	4.71	0.75	1004	6.22	4.67	0.75	1013	6.15	4.61	0.75	1022	6.07	4.56	0.75	1030	6.01	4.51	0.75	1035	5.95	4.46	0.75	1068	5.87	4.40	0.75	1113	5.76	4.32	0.75	1186	5.63	4.22	0.75	1239	5.46	4.10	0.75	1284	5.02	3.76	0.75	1362	4.14	3.10	0.75	1412	3.41	2.56	0.75	1464
	28	24	6.39	4.03	0.63	1024	6.33	3.99	0.63	1033	6.26	3.94	0.63	1042	6.18	3.89	0.63	1050	6.12	3.85	0.63	1055	6.05	3.81	0.63	1088	5.97	3.76	0.63	1133	5.86	3.69	0.63	1206	5.72	3.61	0.63	1259	5.56	3.50	0.63	1304	5.10	3.21	0.63	1382	4.21	2.65	0.63	1432	3.47	2.19	0.63	1485
	28	26	6.48	3.30	0.51	1047	6.42	3.27	0.51	1056	6.35	3.24	0.51	1065	6.26	3.19	0.51	1073	6.20	3.16	0.51	1078	6.13	3.13	0.51	1111	6.05	3.09	0.51	1157	5.94	3.03	0.51	1229	5.80	2.96	0.51	1282	5.63	2.87	0.51	1327	5.17	2.64	0.51	1405	4.27	2.18	0.51	1455	3.52	1.80	0.51	1508
	29	18	6.16	6.22	1.01	971	6.10	6.16	1.01	980	6.03	6.09	1.01	989	5.95	6.01	1.01	997	5.89	5.95	1.01	1002	5.83	5.89	1.01	1036	5.75	5.81	1.01	1081	5.65	5.70	1.01	1155	5.52	5.57	1.01	1208	5.35	5.41	1.01	1254	4.92	4.96	1.01	1332	4.06	4.10	1.01	1383	3.35	3.38	1.01	1436
	29	20	6.28	5.72	0.91	997	6.22	5.66	0.91	1005	6.15	5.60	0.91	1014	6.07	5.53	0.91	1023	6.01	5.47	0.91	1028	5.95	5.41	0.91	1061	5.87	5.34	0.91	1107	5.76	5.24	0.91	1180	5.63	5.12	0.91	1234	5.46	4.97	0.91	1279	5.02	4.56	0.91	1358	4.14	3.77	0.91	1409	3.41	3.11	0.91	1462
	29	22	6.41	5.06	0.79	1014	6.35	5.01	0.79	1023	6.28	4.96	0.79	1032	6.20	4.89	0.79	1040	6.13	4.85	0.79	1045	6.07	4.79	0.79	1078	5.98	4.73	0.79	1124	5.88	4.64	0.79	1198	5.74	4.53	0.79	1251	5.57	4.40	0.79	1297	5.12	4.04	0.79	1375	4.22	3.33	0.79	1426	3.48	2.75	0.79	1479
	29	24	6.45	4.32	0.67	1034	6.39	4.28	0.67	1043	6.32	4.23	0.67	1052	6.24	4.18	0.67	1060	6.18	4.14	0.67	1065	6.11	4.09	0.67	1099	6.03	4.04	0.67	1145	5.92	3.97	0.67	1218	5.78	3.87	0.67	1272	5.61	3.76	0.67	1317	5.15	3.45	0.67	1396	4.25	2.85	0.67	1447	3.51	2.35	0.67	1500
	29	26	6.54	3.60	0.55	1058	6.48	3.56	0.55	1067	6.41	3.52	0.55	1076	6.33	3.48	0.55	1084	6.26	3.45	0.55	1089	6.20	3.41	0.55	1122	6.11	3.36	0.55	1168	6.00	3.30	0.55	1242	5.86	3.22	0.55	1295	5.69	3.13	0.55	1341	5.22	2.87	0.55	1419	4.31	2.37	0.55	1470	3.56	1.96	0.55	1523
	30	18	6.22	6.28	1.01	981	6.16	6.22	1.01	990	6.09	6.15	1.01	999	6.01	6.07	1.01	1007	5.95	6.01	1.01	1012	5.89	5.95	1.01	1046	5.81	5.86	1.01	1092	5.70	5.76	1.01	1166	5.57	5.63	1.01	1221	5.41	5.46	1.01	1266	4.96	5.01	1.01	1346	4.10	4.14	1.01	1397	3.38	3.41	1.01	1451
	30	20	6.35	6.03	0.95	1007	6.28	5.97	0.95	1016	6.21	5.90	0.95	1025	6.13	5.83	0.95	1033	6.07	5.77	0.95	1038	6.01	5.71	0.95	1072	5.93	5.63	0.95	1118	5.82	5.53	0.95	1192	5.68	5.40	0.95	1246	5.52	5.24	0.95	1292	5.07	4.81	0.95	1371	4.18	3.97	0.95	1423	3.45	3.28	0.95	1476
	30	22	6.47	5.37	0.83	1024	6.41	5.32	0.83	1033	6.34	5.26	0.83	1042	6.26	5.19	0.83	1050	6.20	5.14	0.83	1055	6.13	5.09	0.83	1089	6.04	5.02	0.83	1135	5.94	4.93	0.83	1210	5.80	4.81	0.83	1264	5.63	4.67	0.83	1310	5.17	4.29	0.83	1389	4.26	3.54	0.83	1440	3.52	2.92	0.83	1494
	30	24	6.52	4.63	0.71	1045	6.45	4.58	0.71	1054	6.38	4.53	0.71	1063	6.30	4.47	0.71	1071	6.24	4.43	0.71	1076	6.17	4.38	0.71	1110	6.09	4.32	0.71	1156	5.98	4.24	0.71	1230	5.84	4.15	0.71	1284	5.67	4.02	0.71	1330	5.20	3.69	0.71	1410	4.29	3.05	0.71	1461	3.54	2.51	0.71	1515
	30	26	6.61	3.90	0.59	1068	6.54	3.86	0.59	1077	6.47	3.82	0.59	1086	6.39	3.77	0.59	1095	6.33	3.73	0.59	1100	6.26	3.69	0.59	1133	6.17	3.64	0.59	1180	6.06	3.58	0.59	1254	5.92	3.49	0.59	1308	5.75	3.39	0.59	1354	5.28	3.11	0.59	1433	4.35	2.57	0.59	1485	3.59	2.12	0.59	1538
	31	18	6.28	6.34	1.01	991	6.22	6.28	1.01	1000	6.15	6.21	1.01	1009	6.07	6.13	1.01	1017	6.01	6.07	1.01	1022	5.95	6.01	1.01	1056	5.86	5.92	1.01	1103	5.76	5.82	1.01	1178	5.63	5.68	1.01	1233	5.46	5.52	1.01	1279	5.01	5.06	1.01	1359	4.14	4.18	1.01	1411	3.41	3.45	1.01	1465
	31	20	6.41	6.35	0.99	1017	6.35	6.28	0.99	1026	6.28	6.21	0.99	1035	6.20	6.13	0.99	1043	6.13	6.07	0.99	1048	6.07	6.01	0.99	1082	5.98	5.92	0.99	1129	5.88	5.82	0.99	1204	5.74	5.68	0.99	1259	5.57	5.52	0.99	1305	5.12	5.07	0.99	1385	4.22	4.18	0.99	1437	3.48	3.45	0.99	1491
	31	22	6.54	5.69	0.87	1034	6.47	5.63	0.87	1043	6.40	5.57	0.87	1053	6.32	5.50	0.87	1061	6.26	5.44	0.87	1066	6.19	5.38	0.87	1100	6.10	5.31	0.87	1147	6.00	5.22	0.87	1222	5.86	5.09	0.87	1276	5.68	4.95	0.87	1323	5.22	4.54	0.87	1403	4.31	3.75	0.87	1455	3.55	3.09	0.87	1509
	31	24	6.58	4.94	0.75	1055	6.52	4.89	0.75	1064	6.45	4.84	0.75	1073	6.36	4.77	0.75	1082	6.30	4.73	0.75	1087	6.23	4.67	0.75	1121	6.15	4.61	0.75	1168	6.04	4.53	0.75	1243	5.90	4.42	0.75	1297	5.72	4.29	0.75	1344	5.26	3.94	0.75	1424	4.34	3.25	0.75	1476	3.58	2.68	0.75	1530
	31	26	6.68	4.21	0.63	1079	6.61	4.16	0.63	1088	6.54	4.12	0.63	1097	6.45	4.07	0.63	1106	6.39	4.03	0.63	1111	6.32	3.98	0.63	1145	6.23	3.93	0.63	1192	6.12	3.86	0.63	1266	5.98	3.77	0.63	1321	5.81	3.66	0.63	1368	5.33	3.36	0.63	1448	4.40	2.77	0.63	1500	3.63	2.29	0.63	1554
	32	18	6.34	6.41	1.01	1000	6.28	6.34	1.01	1010	6.21	6.27	1.01	1019	6.13	6.19	1.01	1027	6.07	6.13	1.01	1032	6.01	6.07	1.01	1067	5.92	5.98	1.01	1114	5.82	5.88	1.01	1190	5.68	5.74	1.01	1245	5.52	5.57	1.01	1292	5.06	5.11	1.01	1373	4.18	4.22	1.01	1425	3.45	3.48	1.01	1480
	32	20	6.47	6.54	1.01	1027	6.41	6.47	1.01	1036	6.34	6.40	1.01	1045	6.26	6.32	1.01	1054	6.20	6.26	1.01	1059	6.13	6.19	1.01	1093	6.04	6.10	1.01	1140	5.94	6.00	1.01	1216	5.80	5.86	1.01	1271	5.63	5.69	1.01	1318	5.17	5.22	1.01	1399	4.26	4.31	1.01	1452	3.52	3.55	1.01	1506
	32	22	6.60	6.01	0.91	1045	6.54	5.95	0.91	1054	6.47	5.88	0.91	1063	6.38	5.81	0.91	1071	6.32	5.75	0.91	1077	6.25	5.69	0.91	1111	6.16	5.61	0.91	1158	6.06	5.51	0.91	1234	5.91	5.38	0.91	1289	5.74	5.23	0.91	1336	5.27	4.80	0.91	1417	4.35	3.96	0.91	1469	3.59	3.26	0.91	1524
	32	24	6.65	5.25	0.79	1066	6.58	5.20	0.79	1075	6.51	5.14	0.79

4. CAPACITIES AND SELECTION DATA

Cooling Operation PERFORMANCE DATA

OUTDOOR DB (°C)

COMBINATION (%)	IDDB (°C)	IDWB (°C)	-15				-7				0				10				15				21				25				27				30				35				40				45				50			
			Q	SHC	SHF	IPT	Q	SHC	SHF	IPT	Q	SHC	SHF	IPT	Q	SHC	SHF	IPT	Q	SHC	SHF	IPT	Q	SHC	SHF	IPT	Q	SHC	SHF	IPT	Q	SHC	SHF	IPT	Q	SHC	SHF	IPT	Q	SHC	SHF	IPT	Q	SHC	SHF	IPT	Q	SHC	SHF	IPT	Q	SHC	SHF	IPT
100%	21	18	5.03	3.57	0.71	874	4.98	3.54	0.71	882	4.93	3.50	0.71	890	4.87	3.46	0.71	898	4.82	3.42	0.71	902	4.77	3.38	0.71	932	4.70	3.34	0.71	973	4.62	3.28	0.71	1040	4.51	3.20	0.71	1088	4.38	3.11	0.71	1129	4.02	2.85	0.71	1199	3.32	2.35	0.71	1245	2.74	1.94	0.71	1293
	21	20	5.24	3.09	0.59	898	5.19	3.06	0.59	906	5.13	3.03	0.59	914	5.07	2.99	0.59	921	5.02	2.96	0.59	926	4.96	2.93	0.59	956	4.89	2.89	0.59	997	4.81	2.84	0.59	1063	4.69	2.77	0.59	1111	4.56	2.69	0.59	1152	4.18	2.47	0.59	1223	3.45	2.04	0.59	1269	2.85	1.68	0.59	1317
	22	18	5.19	3.89	0.75	883	5.14	3.85	0.75	891	5.08	3.81	0.75	899	5.02	3.76	0.75	907	4.97	3.73	0.75	911	4.91	3.68	0.75	942	4.85	3.63	0.75	983	4.76	3.57	0.75	1050	4.65	3.49	0.75	1099	4.51	3.38	0.75	1140	4.14	3.11	0.75	1212	3.42	2.56	0.75	1258	2.82	2.11	0.75	1306
	22	20	5.35	3.37	0.63	907	5.30	3.34	0.63	915	5.24	3.30	0.63	923	5.17	3.26	0.63	930	5.12	3.23	0.63	935	5.06	3.19	0.63	965	4.99	3.15	0.63	1007	4.91	3.09	0.63	1074	4.79	3.02	0.63	1123	4.65	2.93	0.63	1164	4.27	2.69	0.63	1235	3.52	2.22	0.63	1282	2.91	1.83	0.63	1330
	22	22	5.44	2.77	0.51	923	5.39	2.75	0.51	931	5.33	2.72	0.51	939	5.26	2.68	0.51	947	5.21	2.66	0.51	951	5.15	2.63	0.51	982	5.08	2.59	0.51	1023	4.99	2.54	0.51	1090	4.87	2.48	0.51	1139	4.73	2.41	0.51	1180	4.34	2.21	0.51	1251	3.58	1.83	0.51	1298	2.96	1.51	0.51	1346
	23	18	5.30	4.18	0.79	892	5.24	4.14	0.79	900	5.19	4.10	0.79	908	5.12	4.04	0.79	916	5.07	4.00	0.79	920	5.01	3.96	0.79	951	4.94	3.91	0.79	993	4.86	3.84	0.79	1061	4.74	3.75	0.79	1110	4.60	3.64	0.79	1152	4.23	3.34	0.79	1224	3.49	2.76	0.79	1271	2.88	2.27	0.79	1319
	23	20	5.46	3.66	0.67	916	5.40	3.62	0.67	924	5.34	3.58	0.67	932	5.28	3.54	0.67	940	5.22	3.50	0.67	944	5.17	3.46	0.67	975	5.10	3.41	0.67	1017	5.01	3.35	0.67	1085	4.89	3.28	0.67	1134	4.75	3.18	0.67	1176	4.36	2.92	0.67	1248	3.59	2.41	0.67	1295	2.97	1.99	0.67	1343
	23	22	5.55	3.05	0.55	932	5.50	3.02	0.55	940	5.44	2.99	0.55	949	5.37	2.95	0.55	956	5.31	2.92	0.55	961	5.25	2.89	0.55	991	5.18	2.85	0.55	1034	5.09	2.80	0.55	1101	4.97	2.73	0.55	1150	4.83	2.65	0.55	1192	4.43	2.44	0.55	1264	3.66	2.01	0.55	1311	3.02	1.66	0.55	1360
	24	18	5.40	4.48	0.83	901	5.35	4.44	0.83	909	5.29	4.39	0.83	918	5.22	4.34	0.83	925	5.17	4.29	0.83	930	5.12	4.25	0.83	961	5.05	4.19	0.83	1003	4.96	4.11	0.83	1071	4.84	4.02	0.83	1121	4.70	3.90	0.83	1163	4.31	3.58	0.83	1236	3.56	2.95	0.83	1283	2.94	2.44	0.83	1333
	24	20	5.57	3.95	0.71	925	5.51	3.91	0.71	933	5.45	3.87	0.71	942	5.38	3.82	0.71	949	5.33	3.78	0.71	954	5.27	3.74	0.71	985	5.20	3.69	0.71	1028	5.11	3.63	0.71	1096	4.99	3.54	0.71	1145	4.84	3.44	0.71	1188	4.45	3.16	0.71	1260	3.67	2.60	0.71	1308	3.03	2.15	0.71	1357
	24	22	5.66	3.34	0.59	942	5.61	3.31	0.59	950	5.55	3.27	0.59	958	5.48	3.23	0.59	966	5.42	3.20	0.59	970	5.36	3.16	0.59	1001	5.29	3.12	0.59	1044	5.19	3.06	0.59	1112	5.07	2.99	0.59	1162	4.93	2.91	0.59	1204	4.52	2.67	0.59	1277	3.73	2.20	0.59	1324	3.08	1.82	0.59	1373
	24	24	5.74	2.70	0.47	961	5.69	2.67	0.47	969	5.62	2.64	0.47	978	5.55	2.61	0.47	985	5.50	2.58	0.47	990	5.44	2.56	0.47	1021	5.36	2.52	0.47	1063	5.27	2.48	0.47	1132	5.14	2.42	0.47	1181	4.99	2.35	0.47	1224	4.58	2.15	0.47	1296	3.78	1.78	0.47	1344	3.12	1.47	0.47	1393
	25	18	5.57	4.85	0.87	910	5.52	4.80	0.87	918	5.46	4.75	0.87	927	5.39	4.69	0.87	934	5.33	4.64	0.87	939	5.27	4.59	0.87	970	5.20	4.53	0.87	1013	5.11	4.45	0.87	1082	4.99	4.34	0.87	1132	4.84	4.21	0.87	1175	4.45	3.87	0.87	1249	3.67	3.19	0.87	1296	3.03	2.63	0.87	1346
	25	20	5.74	4.31	0.75	935	5.68	4.26	0.75	943	5.62	4.22	0.75	951	5.55	4.16	0.75	959	5.50	4.12	0.75	964	5.44	4.08	0.75	995	5.36	4.02	0.75	1038	5.27	3.95	0.75	1107	5.14	3.86	0.75	1157	4.99	3.74	0.75	1200	4.58	3.44	0.75	1273	3.78	2.84	0.75	1321	3.12	2.34	0.75	1371
	25	22	5.84	3.68	0.63	951	5.78	3.64	0.63	960	5.72	3.60	0.63	968	5.64	3.56	0.63	976	5.59	3.52	0.63	980	5.53	3.48	0.63	1012	5.45	3.43	0.63	1055	5.36	3.37	0.63	1123	5.23	3.29	0.63	1174	5.08	3.20	0.63	1216	4.66	2.94	0.63	1290	3.85	2.42	0.63	1338	3.17	2.00	0.63	1387
	25	24	5.92	3.02	0.51	971	5.86	2.99	0.51	979	5.80	2.96	0.51	988	5.72	2.92	0.51	995	5.67	2.89	0.51	1000	5.61	2.86	0.51	1031	5.53	2.82	0.51	1074	5.43	2.77	0.51	1143	5.30	2.70	0.51	1193	5.15	2.63	0.51	1236	4.73	2.41	0.51	1309	3.90	1.99	0.51	1357	3.22	1.64	0.51	1407
	26	18	5.74	5.23	0.91	919	5.69	5.17	0.91	928	5.62	5.12	0.91	936	5.55	5.05	0.91	944	5.50	5.00	0.91	949	5.44	4.95	0.91	980	5.36	4.88	0.91	1024	5.27	4.79	0.91	1093	5.14	4.68	0.91	1144	4.99	4.54	0.91	1187	4.58	4.17	0.91	1261	3.78	3.44	0.91	1310	3.12	2.84	0.91	1360
	26	20	5.92	4.68	0.79	944	5.86	4.63	0.79	952	5.80	4.58	0.79	961	5.72	4.52	0.79	969	5.67	4.48	0.79	973	5.60	4.43	0.79	1005	5.53	4.37	0.79	1048	5.43	4.29	0.79	1118	5.30	4.19	0.79	1169	5.15	4.07	0.79	1212	4.72	3.73	0.79	1286	3.90	3.08	0.79	1334	3.22	2.54	0.79	1384
	26	22	6.02	4.03	0.67	961	5.96	3.99	0.67	969	5.89	3.95	0.67	978	5.82	3.90	0.67	985	5.76	3.86	0.67	990	5.70	3.82	0.67	1022	5.62	3.77	0.67	1065	5.52	3.70	0.67	1135	5.39	3.61	0.67	1186	5.23	3.51	0.67	1229	4.81	3.22	0.67	1303	3.96	2.66	0.67	1351	3.27	2.19	0.67	1401
	26	24	6.10	3.36	0.55	981	6.04	3.32	0.55	989	5.98	3.29	0.55	998	5.90	3.25	0.55	1005	5.84	3.21	0.55	1010	5.78	3.18	0.55	1042	5.70	3.13	0.55	1085	5.60	3.08	0.55	1155	5.47	3.01	0.55	1205	5.31	2.92	0.55	1248	4.87	2.68	0.55	1323	4.02	2.21	0.55	1371	3.32	1.82	0.55	1421
	26	26	6.20	2.67	0.43	1003	6.14	2.64	0.43	1012	6.07	2.61	0.43	1020	6.00	2.58	0.43	1028	5.94	2.55	0.43	1033	5.87	2.52	0.43	1064	5.79	2.49	0.43	1108	5.69	2.45	0.43	1177	5.55	2.39	0.43	1228	5.39	2.32	0.43	1271	4.95	2.13	0.43	1345	4.08	1.76	0.43	1394	3.37	1.45	0.43	1444
	27	18	5.86	5.57	0.95	928	5.80	5.51	0.95	937	5.74	5.45	0.95	946	5.67	5.38	0.95	953	5.61	5.33	0.95	958	5.55	5.27	0.95	990	5.47	5.20	0.95	1034	5.37	5.11	0.95	1104	5.25	4.99	0.95	1155	5.10	4.84	0.95	1199	4.68	4.44	0.95	1274	3.86	3.67	0.95	1323	3.18	3.02	0.95	1373
	27	19	5.98	5.32	0.89	938	5.92	5.27	0.89	947	5.86	5.21	0.89	956	5.78	5.15	0.89	963	5.72	5.09	0.89	968	5.66	5.04	0.89	1000	5.58	4.97	0.89	1044	5.48	4.88	0.89	1114	5.36	4.77	0.89	1165	5.20	4.63	0.89	1209	4.77	4.25	0.89	1284	3.94	3.51	0.89	1333	3.25	2.89	0.89	1383
	27	20	6.04	5.01	0.83	953	5.98	4.96	0.83	962	5.91	4.91	0.83	971	5.84	4.85	0.83	978	5.78	4.80	0.83	983	5.72	4.75	0.83	1015	5.64	4.68	0.83	1059	5.54	4.60	0.83	1129	5.41	4.49	0.83	1180	5.25	4.36	0.83	1224	4.82	4.00	0.83	1299	3.98	3.30	0.83	1348	3.28	2.72	0.83	1398
	27	22	6.14	4.36	0.71	970	6.08	4.32	0.71	979	6.02	4.27	0.71	988	5.94	4.22	0.71	995	5.88	4.17	0.71	1000	5.82	4.13	0.71	1032	5.73	4.07	0.71	1076	5.63	4.00	0.71	1146	5.50	3.91	0.71	1197	5.34	3.79	0.71	1241	4.90	3.48	0.71	1316	4.05	2.87	0.71	1365	3.34	2.37	0.71	1415
	27	24	6.23	3.67	0.59	990	6.17	3.64	0.59	999	6.10	3.60	0.59	1008	6.02	3.55	0.59	1015	5.96	3.52	0.59	1020	5.90	3.48	0.59	1052	5.82	3.43	0.59	1096	5.71	3.37	0.59	1166	5.58	3.29	0.59	1217	5.42	3.20	0.59	1261	4.97	2.93	0.59	1336	4.10	2.42	0.59	1385	3.38	2.00	0.59	1435
	27	26	6.33	2.97	0.47	1013	6.27	2.94	0.47	1022	6.20	2.91	0.47	1031	6.12	2.88	0.47	1038	6.06	2.85	0.47	1043	5.99	2.82	0.47	1075	5.91	2.78	0.47	1119	5.80	2.73	0.47	1189	5.67	2.66	0.47	1240	5.50	2.59	0.47	1284	5.05	2.37	0.47	1359	4.17	1.96	0.47	1408	3.44	1.62	0.47	1458
	28	18	5.92	5.86	0.99	938	5.86	5.80	0.99	946	5.80	5.74	0.99	955	5.72	5.66	0.99	963	5.67	5.61	0.99	968	5.60	5.55	0.99	1000	5.53	5.47	0.99	1044	5.43	5.37	0.99	1115	5.30	5.25	0.99	1167	5.15	5.10	0.99	1211	4.72	4.68	0.99	1287	3.90	3.86	0.99	1336	3.22	3.18	0.99	1387
	28	20	6.04	5.25	0.87	963	5.98	5.20	0.87	972	5.91	5.15	0.87	980	5.84	5.08	0.87	988	5.78	5.03	0.87	993	5.72	4.97	0.87	1025	5.64	4.91	0.87	1070	5.54	4.82	0.87	1140	5.41	4.71	0.87	1192	5.25	4.57	0.87	1236	4.82	4.19	0.87	1312	3.98	3.46	0.87	1361	3.28	2.85	0.87	1412
	28	22	6.10	4.57	0.75	980	6.04	4.53	0.75	989	5.97	4.48	0.75	997	5.90	4.42	0.75	1005	5.84	4.38	0.75	1010	5.78	4.33	0.75	1042	5.70	4.27	0.75	1087	5.59	4.20	0.75	1158	5.46	4.10	0.75	1209	5.30	3.98	0.75	1253	4.87	3.65	0.75	1329	4.02	3.01	0.75	1378	3.31	2.49	0.75	1430
	28	24	6.20	3.91	0.63	1000	6.14	3.87	0.63	1009	6.08	3.83	0.63	1018	6.00	3.78	0.63	1025	5.94	3.74	0.63	1030	5.87	3.70	0.63	1063	5.79	3.65	0.63	1107	5.69	3.58	0.63	1178	5.56	3.50	0.63	1230	5.39	3.40	0.63	1274	4.95	3.12	0.63	1349	4.09	2.57	0.63	1399	3.37	2.12	0.63	1450
	28	26	6.29	3.21	0.51	1024	6.23	3.18	0.51	1032	6.16	3.14	0.51	1041	6.08	3.10	0.51	1049	6.02	3.07	0.51	1054	5.96	3.04	0.51	1086	5.87	3.00	0.51	1130	5.77	2.94	0.51	1201	5.63	2.87	0.51	1253	5.47	2.79	0.51	1297	5.02	2.56	0.51	1373	4.14	2.11	0.51	1422	3.42	1.74	0.51	1473
	29	18	5.98	6.04	1.01	947	5.92	5.98	1.01	956	5.85	5.91	1.01	965	5.78	5.84	1.01	972	5.72	5.78	1.01	977	5.66	5.72	1.01	1010	5.58	5.64	1.01	1055	5.48	5.54	1.01	1126	5.35	5.41	1.01	1179	5.20	5.25	1.01	1223	4.77	4.82	1.01	1300	3.94	3.98	1.01	1349	3.25	3.28	1.01	1401
	29	20	6.10	5.55	0.91	973	6.04	5.50	0.91	981	5.97	5.44	0.91	990	5.90	5.37	0.91	998	5.84	5.31	0.91	1003	5.78	5.26	0.91	1036	5.70	5.18	0.91	1080	5.59	5.09	0.91	1152	5.46	4.97	0.91	1204	5.30	4.83	0.91	1249	4.87	4.43	0.91	1325	4.02	3.66	0.91	1375	3.31	3.02	0.91	1427
	29	22	6.22	4.92	0.79	990	6.16	4.87	0.79	999	6.09	4.81	0.79	1007	6.02	4.75	0.79	1015	5.96	4.70	0.79	1020	5.89	4.65	0.79	1053	5.81	4.59	0.79	1098	5.71	4.51	0.79	1169	5.57	4.40	0.79	1222	5.41	4.27	0.79	1266	4.97	3.92	0.79	1342	4.10	3.24	0.79	1392	3.38	2.67	0.79	1444
	29	24	6.27	4.20	0.67	1010	6.20	4.16	0.67	1019	6.14	4.11	0.67	1028	6.06	4.06	0.67	1036	6.00	4.02	0.67	1041	5.93	3.97	0.67	1073	5.85	3.92	0.67	1118	5.75	3.85	0.67	1190	5.61	3.76	0.67	1242	5.45	3.65	0.67	1286	5.00	3.35	0.67	1363	4.13	2.76	0.67	1413	3.40	2.28	0.67	1464
	29	26	6.35	3.49	0.55	1034	6.29	3.46	0.55	1043	6.22	3.42	0.55	1051	6.14	3.38	0.55	1059	6.08	3.34	0.55	1064	6.02	3.31	0.55	1097	5.93	3.26	0.55	1141	5.83	3.20	0.55	1213	5.69	3.13	0.55	1265	5.52	3.04	0.55	1310	5.07	2.79	0.55	1386	4.18	2.30	0.55	1436	3.45	1.90	0.55	1488
	30	18	6.04	6.10	1.01	957	5.98	6.04	1.01	965	5.91	5.97	1.01	974	5.84	5.90	1.01	982	5.78	5.84	1.01	987	5.72	5.77	1.01	1020	5.64	5.69	1.01	1065	5.54	5.59	1.01	1138	5.41	5.46	1.01	1190	5.25	5.30	1.01	1235	4.82	4.87	1.01	1313	3.98	4.02	1.01	1363	3.28	3.31	1.01	1415
	30	20	6.16	5.85	0.95	982	6.10	5.79	0.95	991	6.03	5.73	0.95	1000	5.96	5.66	0.95	1008	5.90	5.60	0.95	1013	5.83	5.54	0.95	1046	5.75	5.46	0.95	1091	5.65	5.37	0.95	1163	5.52	5.24	0.95	1216	5.36	5.09	0.95	1261	4.92	4.67	0.95	1338	4.06	3.85	0.95	1389	3.35	3.18	0.95	1441
	30	22	6.28	5.22	0.83	1000	6.22	5.16	0.83	1009	6.15	5.11	0.83	1018	6.08	5.04	0.83	1025	6.02	4.99	0.83	1030	5.95	4.94	0.83	1063	5.87	4.87	0.83	1109	5.76	4.78	0.83	1181	5.63	4.67	0.83	1234	5.46	4.54	0.83	1279	5.02	4.16	0.83	1356	4.14	3.44	0.83	1406	3.41	2.83	0.83	1458
	30	24	6.33	4.49	0.71	1020	6.27	4.45	0.71	1029	6.20	4.40	0.71	1038	6.12	4.34	0.71	1046	6.06	4.30	0.71	1051	5.99	4.25	0.71	1084	5.91	4.20	0.71	1129	5.80	4.12	0.71	1202	5.67	4.02	0.71	1254	5.50	3.91	0.71	1299	5.05	3.59	0.71	1376	4.17	2.96	0.71	1427	3.44	2.44	0.71	1479
	30	26	6.42	3.79	0.59	1044	6.35	3.75	0.59	1053	6.28	3.71	0.59	1062	6.20	3.66	0.59	1070	6.14	3.62	0.59	1075	6.08	3.58	0.59	1108	5.99	3.53	0.59	1153	5.89	3.47	0.59	1225	5.75	3.39	0.59	1278	5.58	3.29	0.59	1323	5.12	3.02	0.59	1400	4.23	2.49	0.59	1450	3.49	2.06	0.59	1503
	31	18	6.10	6.16	1.01	966	6.04	6.10	1.01	975	5.97	6.03	1.01	984	5.90	5.95	1.01	992	5.84	5.90	1.01	997	5.77	5.83	1.01	1030	5.69	5.75	1.01	1076	5.59	5.65	1.01	1149	5.46	5.52	1.01	1202	5.30	5.36	1.01	1248	4.87	4.92	1.01	1326	4.02	4.06	1.01	1376	3.31	3.35	1.01	1429
	31	20	6.22	6.16	0.99	992	6.16	6.10	0.99	1001	6.09	6.03	0.99	1010	6.02	5.96	0.99	1018	5.96	5.90	0.99	1023	5.89	5.83	0.99	1056	5.81	5.75	0.99	1102	5.71	5.65	0.99	1175	5.57	5.52	0.99	1228	5.41	5.36	0.99	1274	4.97	4.92	0.99	1352	4.10	4.06	0.99	1402	3.38	3.35	0.99	1455
	31	22	6.35	5.52	0.87	1010	6.28	5.47	0.87	1019	6.22	5.41	0.87	1028	6.14	5.34	0.87	1036	6.08	5.29	0.87	1041	6.01	5.23	0.87	1074	5.93	5.16	0.87	1120	5.82	5.06	0.87	1193	5.68	4.95	0.87	1246	5.52	4.80	0.87	1291	5.07	4.41	0.87	1369	4.18	3.64	0.87	1420	3.45	3.00	0.87	1473
	31	24	6.39	4.79	0.75	1031	6.33	4.75	0.75	1040	6.26	4.69	0.75	1049	6.18	4.63	0.75	1057	6.12	4.59	0.75	1062	6.05	4.54	0.75	1095	5.97	4.48	0.75	1141	5.86	4.40	0.75	1214	5.72	4.29	0.75	1267	5.56	4.17	0.75	1312	5.10	3.83	0.75	1390	4.21	3.16	0.75	1441	3.47	2.60	0.75	1494
	31	26	6.48	4.08	0.63	1055	6.42	4.04	0.63	1063	6.35	4.00	0.63	1072	6.27	3.95	0.63	1080	6.20	3.91	0.63	1086	6.14	3.87	0.63	1119	6.05	3.81	0.63	1164	5.94	3.74	0.63	1237	5.81	3.66	0.63	1291	5.64	3.55	0.63	1336	5.17	3.26	0.63	1414	4.27	2.69	0.63	1465	3.52	2.22	0.63	1518
	32	18	6.16	6.22	1.01	976	6.10	6.16	1.01	985	6.03	6.09	1.01	994	5.95	6.01	1.01	1002	5.90	5.95	1.01	1007	5.83	5.89	1.01	1041	5.75	5.81	1.01	1087	5.65	5.71	1.01	1161	5.52	5.57	1.01	1214	5.36	5.41	1.01	1260	4.92	4.97	1.01	1339	4.06	4.10	1.01	1390	3.35	3.38	1.01	1443
	32	20	6.28	6.35	1.01	1002	6.22	6.28	1.01	1011	6.15	6.22	1.01	1020	6.08	6.14	1.01	1028	6.02	6.08	1.01	1033	5.95	6.01	1.01	1067	5.87	5.93	1.01	1113	5.76	5.82	1.01	1187	5.63	5.69	1.01	1241	5.47	5.52	1.01	1286	5.02	5.07	1.01	1365	4.14	4.18	1.01	1416	3.41	3.45	1.01	1470
	32	22	6.41	5.83	0.91	1020	6.35	5.78	0.91	1029	6.28	5.71	0.91	1038	6.20	5.64	0.91	1046	6.14	5.58	0.91	1051	6.07	5.52	0.91	1085	5.99	5.45	0.91	1131	5.88	5.35	0.91	1205	5.74	5.23	0.91	1259	5.57	5.07	0.91	1304	5.12	4.66	0.91	1383	4.22	3.84	0.91	1434	3.48	3.17	0.91	1488
	32	24	6.46	5.10	0.79	1041	6.39	5.05	0.79	1050	6.32	4.99	0.79	1059	6.24	4.93	0.79	1067	6.18	4.88	0.79	1072	6.11	4.83	0.79	1106	6.03	4.76	0.79	1152	5.92	4.68	0

4. CAPACITIES AND SELECTION DATA

| | | | Cooling Operation PERFORMANCE DATA | | |

4. CAPACITIES AND SELECTION DATA

| | | | Cooling Operation PERFORMANCE DATA | | |

4. CAPACITIES AND SELECTION DATA

18K(Up to 3 indoor units series)

HEATING PERFORMANCE DATA

COMBINATION（%）	INDOOR DB(℃)	OUTDOOR WB(℃)									
		0		5		10		15		20	
		Q	INPUT	Q	INPUT	Q	INPUT	Q	INPUT	Q	INPUT
130%	15	5.70	1352	6.20	1423	6.69	1494	7.03	1539	7.24	1570
	16	5.63	1363	6.12	1435	6.61	1507	6.94	1552	7.15	1583
	17	5.57	1374	6.05	1446	6.54	1519	6.86	1564	7.07	1596
	18	5.50	1385	5.98	1458	6.46	1531	6.78	1577	6.98	1608
	19	5.44	1396	5.91	1470	6.38	1543	6.70	1590	6.90	1621
	20	5.38	1408	5.85	1482	6.32	1556	6.63	1602	6.83	1634
	21	5.32	1423	5.78	1498	6.24	1573	6.55	1620	6.75	1652
	22	5.25	1439	5.71	1514	6.17	1590	6.48	1638	6.67	1671
	23	5.19	1455	5.64	1531	6.09	1608	6.40	1656	6.59	1689
	24	5.13	1471	5.57	1548	6.02	1625	6.32	1674	6.51	1708
	25	5.07	1487	5.51	1565	5.95	1643	6.25	1692	6.43	1726
	26	5.01	1503	5.44	1582	5.88	1661	6.17	1711	6.36	1745
	27	4.95	1520	5.38	1600	5.81	1680	6.10	1730	6.28	1765
	28	4.89	1536	5.31	1617	5.74	1698	6.02	1749	6.20	1784
	29	4.83	1553	5.25	1635	5.67	1717	5.95	1768	6.13	1804
	30	4.77	1570	5.18	1653	5.60	1736	5.88	1788	6.06	1823

COMBINATION（%）	INDOOR DB(℃)	OUTDOOR WB(℃)									
		0		5		10		15		20	
		Q	INPUT	Q	INPUT	Q	INPUT	Q	INPUT	Q	INPUT
120%	15	5.50	1328	5.98	1398	6.46	1468	6.78	1512	6.99	1542
	16	5.44	1339	5.91	1409	6.38	1479	6.70	1524	6.90	1554
	17	5.37	1349	5.84	1420	6.31	1491	6.62	1536	6.82	1567
	18	5.31	1360	5.77	1432	6.23	1503	6.54	1548	6.74	1579
	19	5.25	1371	5.70	1443	6.16	1515	6.47	1561	6.66	1592
	20	5.19	1382	5.65	1455	6.10	1528	6.40	1574	6.59	1605
	21	5.13	1397	5.58	1471	6.02	1545	6.32	1591	6.51	1623
	22	5.07	1413	5.51	1487	5.95	1562	6.25	1608	6.44	1641
	23	5.01	1428	5.44	1504	5.88	1579	6.17	1626	6.36	1659
	24	4.95	1444	5.38	1520	5.81	1596	6.10	1644	6.28	1677
	25	4.89	1460	5.31	1537	5.74	1614	6.03	1662	6.21	1695
	26	4.83	1476	5.25	1554	5.67	1631	5.95	1680	6.13	1714
	27	4.77	1492	5.19	1571	5.60	1649	5.88	1699	6.06	1733
	28	4.72	1509	5.13	1588	5.54	1667	5.81	1717	5.99	1752
	29	4.66	1525	5.06	1606	5.47	1686	5.74	1736	5.91	1771
	30	4.60	1542	5.00	1623	5.40	1704	5.67	1755	5.84	1791

COMBINATION（%）	INDOOR DB(℃)	OUTDOOR WB(℃)									
		15	20	-15	-10	-5	0	5	10	15	20
		Q	INPUT	Q	INPUT	Q	INPUT	Q	INPUT	Q	INPUT
110%	15	5.34	1315	5.80	1384	6.27	1453	6.58	1496	6.78	1526
	16	5.27	1325	5.73	1395	6.19	1465	6.50	1509	6.70	1539
	17	5.21	1336	5.66	1406	6.12	1476	6.42	1521	6.62	1551
	18	5.15	1347	5.60	1417	6.04	1488	6.35	1533	6.54	1564
	19	5.09	1357	5.53	1429	5.97	1500	6.27	1545	6.46	1576
	20	5.04	1368	5.48	1440	5.91	1512	6.21	1558	6.40	1589
	21	4.98	1383	5.41	1456	5.84	1529	6.14	1575	6.32	1606
	22	4.92	1399	5.35	1472	5.77	1546	6.06	1592	6.24	1624
	23	4.86	1414	5.28	1488	5.70	1563	5.99	1610	6.17	1642
	24	4.80	1430	5.22	1505	5.64	1580	5.92	1627	6.09	1660
	25	4.74	1445	5.16	1521	5.57	1597	5.85	1645	6.02	1678
	26	4.69	1461	5.09	1538	5.50	1615	5.78	1664	5.95	1697
	27	4.63	1477	5.03	1555	5.43	1633	5.71	1682	5.88	1715
	28	4.57	1494	4.97	1572	5.37	1651	5.64	1700	5.81	1734
	29	4.52	1510	4.91	1589	5.31	1669	5.57	1719	5.74	1753
	30	4.46	1527	4.85	1607	5.24	1687	5.50	1738	5.67	1773

4. CAPACITIES AND SELECTION DATA

COMBINATION (%)	INDOOR DB(℃)	OUTDOOR WB(℃)									
		0		5		10		15		20	
		Q	INPUT	Q	INPUT	Q	INPUT	Q	INPUT	Q	INPUT
100%	15	4.37	942	4.75	992	5.13	1041	5.39	1072	5.55	1094
	16	4.32	950	4.69	1000	5.07	1050	5.32	1081	5.48	1103
	17	4.27	957	4.64	1008	5.01	1058	5.26	1090	5.42	1112
	18	4.22	965	4.58	1016	4.95	1067	5.20	1099	5.35	1121
	19	4.17	973	4.53	1024	4.89	1075	5.14	1107	5.29	1130
	20	4.13	981	4.49	1032	4.84	1084	5.09	1116	5.24	1139
	21	4.08	991	4.43	1044	4.79	1096	5.02	1129	5.18	1151
	22	4.03	1002	4.38	1055	4.73	1108	4.96	1141	5.11	1164
	23	3.98	1013	4.33	1067	4.67	1120	4.91	1154	5.05	1177
	24	3.93	1024	4.27	1078	4.62	1132	4.85	1166	4.99	1190
	25	3.88	1036	4.22	1090	4.56	1145	4.79	1179	4.93	1203
	26	3.84	1047	4.17	1102	4.51	1157	4.73	1192	4.87	1216
	27	3.79	1059	4.12	1114	4.45	1170	4.67	1205	4.81	1229
	28	3.75	1070	4.07	1127	4.40	1183	4.62	1218	4.76	1243
	29	3.70	1082	4.02	1139	4.35	1196	4.56	1232	4.70	1256
	30	3.66	1094	3.97	1152	4.29	1209	4.51	1245	4.64	1270

COMBINATION (%)	INDOOR DB(℃)	OUTDOOR WB(℃)									
		0		5		10		15		20	
		Q	INPUT	Q	INPUT	Q	INPUT	Q	INPUT	Q	INPUT
90%	15	4.22	925	4.58	974	4.95	1022	5.20	1053	5.36	1074
	16	4.17	933	4.53	982	4.89	1031	5.14	1062	5.29	1083
	17	4.12	940	4.48	989	4.83	1039	5.08	1070	5.23	1092
	18	4.07	948	4.42	997	4.78	1047	5.02	1079	5.17	1100
	19	4.02	955	4.37	1006	4.72	1056	4.96	1087	5.11	1109
	20	3.98	963	4.33	1014	4.67	1064	4.91	1096	5.06	1118
	21	3.93	974	4.28	1025	4.62	1076	4.85	1108	4.99	1130
	22	3.89	984	4.22	1036	4.56	1088	4.79	1120	4.93	1143
	23	3.84	995	4.17	1047	4.51	1100	4.73	1133	4.88	1155
	24	3.79	1006	4.12	1059	4.45	1112	4.68	1145	4.82	1168
	25	3.75	1017	4.07	1071	4.40	1124	4.62	1158	4.76	1181
	26	3.70	1028	4.03	1082	4.35	1137	4.57	1171	4.70	1194
	27	3.66	1040	3.98	1094	4.30	1149	4.51	1183	4.65	1207
	28	3.62	1051	3.93	1106	4.24	1162	4.46	1197	4.59	1220
	29	3.57	1063	3.88	1119	4.19	1174	4.40	1210	4.53	1234
	30	3.53	1074	3.84	1131	4.14	1187	4.35	1223	4.48	1247

COMBINATION (%)	INDOOR DB(℃)	OUTDOOR WB(℃)									
		15	20	-15	-10	-5	0	5	10	15	20
		Q	INPUT	Q	INPUT	Q	INPUT	Q	INPUT	Q	INPUT
80%	15	4.09	916	4.45	964	4.80	1012	5.04	1043	5.19	1063
	16	4.04	923	4.39	972	4.75	1020	4.98	1051	5.13	1072
	17	4.00	931	4.34	980	4.69	1029	4.92	1059	5.07	1081
	18	3.95	938	4.29	988	4.63	1037	4.87	1068	5.01	1089
	19	3.90	946	4.24	995	4.58	1045	4.81	1077	4.95	1098
	20	3.86	953	4.20	1003	4.53	1054	4.76	1085	4.90	1107
	21	3.82	964	4.15	1015	4.48	1065	4.70	1097	4.84	1119
	22	3.77	974	4.10	1026	4.43	1077	4.65	1109	4.79	1131
	23	3.72	985	4.05	1037	4.37	1089	4.59	1121	4.73	1144
	24	3.68	996	4.00	1048	4.32	1101	4.54	1134	4.67	1157
	25	3.64	1007	3.95	1060	4.27	1113	4.48	1146	4.62	1169
	26	3.59	1018	3.90	1072	4.22	1125	4.43	1159	4.56	1182
	27	3.55	1029	3.86	1083	4.17	1138	4.37	1172	4.51	1195
	28	3.51	1041	3.81	1095	4.12	1150	4.32	1185	4.45	1208
	29	3.46	1052	3.77	1107	4.07	1163	4.27	1198	4.40	1222
	30	3.42	1064	3.72	1120	4.02	1175	4.22	1211	4.35	1235

Remarks:
Q: Total Cooling Capacity (Gross) **kW**
INPUT: Power Input (including the compressor, evap. fan motor & cond. **W**
DB: Dry Bulb Temperature
WB: Wet Bulb Temperature

4. CAPACITIES AND SELECTION DATA

24K (Up to 3IDUs)

| | | | Cooling Operation PERFORMANCE DATA | | |

4. CAPACITIES AND SELECTION DATA

| | | | Cooling Operation PERFORMANCE DATA | | |

4. CAPACITIES AND SELECTION DATA

| | | | Cooling Operation PERFORMANCE DATA | | |

4. CAPACITIES AND SELECTION DATA

| | | | Cooling Operation PERFORMANCE DATA | | |

4. CAPACITIES AND SELECTION DATA

| | | | Cooling Operation PERFORMANCE DATA | | |

4. CAPACITIES AND SELECTION DATA

| | | | Cooling Operation PERFORMANCE DATA | | |

24K (Up to 3 IDUs)

HEATING PERFORMANCE DATA

COMBINATION (%)	INDOOR DB(℃)	OUTDOOR WB(℃) 0		5		10		15		20	
		Q	INPUT	Q	INPUT	Q	INPUT	Q	INPUT	Q	INPUT
130%	15	8.31	1989	9.03	2093	9.75	2198	10.24	2264	10.55	2309
	16	8.21	2005	8.92	2110	9.64	2216	10.12	2282	10.42	2328
	17	8.11	2021	8.82	2127	9.52	2234	10.00	2301	10.30	2347
	18	8.01	2037	8.71	2145	9.41	2252	9.88	2319	10.18	2366
	19	7.92	2054	8.61	2162	9.30	2270	9.76	2338	10.05	2385
	20	7.84	2070	8.52	2179	9.21	2288	9.67	2357	9.96	2404
	21	7.75	2093	8.42	2203	9.09	2313	9.55	2383	9.84	2430
	22	7.65	2116	8.32	2227	8.99	2339	9.43	2409	9.72	2457
	23	7.56	2139	8.22	2252	8.88	2365	9.32	2435	9.60	2484
	24	7.47	2163	8.12	2277	8.77	2391	9.21	2462	9.49	2512
	25	7.38	2187	8.02	2302	8.67	2417	9.10	2489	9.37	2539
	26	7.29	2211	7.93	2327	8.56	2443	8.99	2517	9.26	2567
	27	7.21	2235	7.83	2353	8.46	2470	8.88	2544	9.15	2595
	28	7.12	2260	7.74	2379	8.36	2498	8.78	2572	9.04	2624
	29	7.03	2285	7.65	2405	8.26	2525	8.67	2601	8.93	2653
	30	6.95	2310	7.55	2431	8.16	2553	8.57	2629	8.82	2682

COMBINATION (%)	INDOOR DB(℃)	OUTDOOR WB(℃) 0		5		10		15		20	
		Q	INPUT	Q	INPUT	Q	INPUT	Q	INPUT	Q	INPUT
120%	15	8.06	1894	8.77	1994	9.47	2093	9.94	2156	10.24	2199
	16	7.97	1909	8.66	2010	9.36	2110	9.82	2174	10.12	2217
	17	7.87	1925	8.56	2026	9.24	2127	9.71	2191	10.00	2235
	18	7.78	1940	8.46	2042	9.13	2145	9.59	2209	9.88	2253
	19	7.69	1956	8.36	2059	9.03	2162	9.48	2227	9.76	2271
	20	7.61	1972	8.28	2075	8.94	2179	9.38	2245	9.67	2290
	21	7.52	1993	8.18	2098	8.83	2203	9.27	2269	9.55	2315
	22	7.43	2015	8.08	2121	8.72	2227	9.16	2294	9.43	2340
	23	7.34	2037	7.98	2145	8.62	2252	9.05	2320	9.32	2366
	24	7.25	2060	7.88	2168	8.52	2277	8.94	2345	9.21	2392
	25	7.17	2083	7.79	2192	8.41	2302	8.83	2371	9.10	2418
	26	7.08	2105	7.70	2216	8.31	2327	8.73	2397	8.99	2445
	27	7.00	2129	7.60	2241	8.21	2353	8.62	2423	8.88	2472
	28	6.91	2152	7.51	2265	8.11	2379	8.52	2450	8.78	2499
	29	6.83	2176	7.42	2290	8.02	2405	8.42	2477	8.67	2526
	30	6.75	2200	7.33	2315	7.92	2431	8.32	2504	8.57	2554

COMBINATION (%)	INDOOR DB(℃)	OUTDOOR WB(℃) 0		5		10		15		20	
		Q	INPUT	Q	INPUT	Q	INPUT	Q	INPUT	Q	INPUT
110%	15	7.83	1857	8.51	1955	9.19	2052	9.65	2114	9.94	2156
	16	7.74	1872	8.41	1970	9.08	2069	9.54	2131	9.82	2174
	17	7.65	1887	8.31	1986	8.98	2086	9.42	2148	9.71	2191
	18	7.55	1902	8.21	2002	8.87	2102	9.31	2166	9.59	2209
	19	7.47	1918	8.11	2019	8.76	2119	9.20	2183	9.48	2227
	20	7.39	1933	8.03	2035	8.68	2137	9.11	2201	9.38	2245
	21	7.30	1954	7.94	2057	8.57	2160	9.00	2225	9.27	2269
	22	7.21	1976	7.84	2080	8.47	2184	8.89	2249	9.16	2294
	23	7.13	1998	7.75	2103	8.37	2208	8.79	2274	9.05	2320
	24	7.04	2020	7.66	2126	8.27	2232	8.68	2299	8.94	2345
	25	6.96	2042	7.56	2149	8.17	2257	8.58	2324	8.83	2371
	26	6.87	2064	7.47	2173	8.07	2281	8.47	2350	8.73	2397
	27	6.79	2087	7.38	2197	7.97	2307	8.37	2376	8.62	2423
	28	6.71	2110	7.29	2221	7.88	2332	8.27	2402	8.52	2450
	29	6.63	2133	7.21	2245	7.78	2358	8.17	2428	8.42	2477
	30	6.55	2157	7.12	2270	7.69	2384	8.07	2455	8.32	2504

4. CAPACITIES AND SELECTION DATA

COMBINATION (%)	INDOOR DB(℃)	OUTDOOR WB(℃)									
		0		5		10		15		20	
		Q	INPUT	Q	INPUT	Q	INPUT	Q	INPUT	Q	INPUT
100%	15	7.60	1803	8.26	1898	8.92	1993	9.37	2052	9.65	2093
	16	7.51	1817	8.17	1913	8.82	2009	9.26	2069	9.54	2110
	17	7.42	1832	8.07	1928	8.71	2025	9.15	2086	9.42	2127
	18	7.33	1847	7.97	1944	8.61	2041	9.04	2102	9.31	2145
	19	7.25	1862	7.88	1960	8.51	2058	8.93	2119	9.20	2162
	20	7.18	1877	7.80	1976	8.42	2074	8.85	2137	9.11	2179
	21	7.09	1897	7.71	1997	8.32	2097	8.74	2160	9.00	2203
	22	7.00	1918	7.61	2019	8.22	2120	8.63	2184	8.89	2227
	23	6.92	1939	7.52	2041	8.12	2144	8.53	2208	8.79	2252
	24	6.84	1961	7.43	2064	8.03	2167	8.43	2232	8.68	2277
	25	6.76	1982	7.34	2087	7.93	2191	8.33	2257	8.58	2302
	26	6.67	2004	7.25	2110	7.84	2215	8.23	2281	8.47	2327
	27	6.59	2026	7.17	2133	7.74	2239	8.13	2307	8.37	2353
	28	6.52	2048	7.08	2156	7.65	2264	8.03	2332	8.27	2379
	29	6.44	2071	7.00	2180	7.56	2289	7.93	2358	8.17	2405
	30	6.36	2094	6.91	2204	7.47	2314	7.84	2384	8.07	2431

COMBINATION (%)	INDOOR DB(℃)	OUTDOOR WB(℃)									
		0		5		10		15		20	
		Q	INPUT	Q	INPUT	Q	INPUT	Q	INPUT	Q	INPUT
90%	15	7.34	1770	7.97	1864	8.61	1957	9.04	2015	9.31	2056
	16	7.25	1785	7.88	1879	8.51	1973	8.94	2032	9.20	2072
	17	7.16	1799	7.79	1894	8.41	1988	8.83	2048	9.09	2089
	18	7.08	1814	7.69	1909	8.31	2004	8.72	2065	8.99	2106
	19	6.99	1828	7.60	1924	8.21	2021	8.62	2081	8.88	2123
	20	6.92	1843	7.53	1940	8.13	2037	8.54	2098	8.79	2140
	21	6.84	1863	7.44	1961	8.03	2059	8.43	2121	8.69	2164
	22	6.76	1884	7.35	1983	7.94	2082	8.33	2144	8.58	2187
	23	6.68	1904	7.26	2005	7.84	2105	8.23	2168	8.48	2211
	24	6.60	1925	7.17	2027	7.75	2128	8.13	2192	8.38	2236
	25	6.52	1947	7.09	2049	7.65	2151	8.04	2216	8.28	2260
	26	6.44	1968	7.00	2072	7.56	2175	7.94	2240	8.18	2285
	27	6.36	1990	6.92	2094	7.47	2199	7.84	2265	8.08	2310
	28	6.29	2012	6.83	2117	7.38	2223	7.75	2290	7.98	2336
	29	6.21	2034	6.75	2141	7.29	2248	7.66	2315	7.89	2361
	30	6.14	2056	6.67	2164	7.20	2272	7.56	2341	7.79	2387

COMBINATION (%)	INDOOR DB(℃)	OUTDOOR WB(℃)									
		15	20	-15	-10	-5	0	5	10	15	20
		Q	INPUT	Q	INPUT	Q	INPUT	Q	INPUT	Q	INPUT
80%	15	7.12	1753	7.73	1845	8.35	1937	8.77	1995	9.03	2035
	16	7.03	1767	7.64	1860	8.25	1953	8.67	2011	8.93	2052
	17	6.95	1781	7.55	1875	8.16	1969	8.56	2028	8.82	2068
	18	6.87	1795	7.46	1890	8.06	1984	8.46	2044	8.72	2085
	19	6.78	1810	7.37	1905	7.96	2000	8.36	2060	8.61	2102
	20	6.72	1825	7.30	1921	7.89	2017	8.28	2077	8.53	2119
	21	6.64	1845	7.21	1942	7.79	2039	8.18	2100	8.43	2142
	22	6.56	1865	7.13	1963	7.70	2061	8.08	2123	8.32	2165
	23	6.48	1885	7.04	1985	7.60	2084	7.99	2146	8.22	2189
	24	6.40	1906	6.96	2006	7.51	2107	7.89	2170	8.13	2213
	25	6.32	1927	6.87	2029	7.42	2130	7.79	2194	8.03	2238
	26	6.25	1948	6.79	2051	7.33	2153	7.70	2218	7.93	2262
	27	6.17	1970	6.71	2073	7.25	2177	7.61	2242	7.84	2287
	28	6.10	1991	6.63	2096	7.16	2201	7.52	2267	7.74	2312
	29	6.03	2013	6.55	2119	7.07	2225	7.43	2292	7.65	2338
	30	5.95	2035	6.47	2143	6.99	2250	7.34	2317	7.56	2364

Remarks:
Q: Total Cooling Capacity (Gross) **kW**
INPUT: Power Input (including the compressor, evap. fan motor & cond. **W**
DB: Dry Bulb Temperature
WB: Wet Bulb Temperature

27K (Up to 4 IDUs)

| | | | Cooling Operation PERFORMANCE DATA | | |

4. CAPACITIES AND SELECTION DATA

Cooling Operation PERFORMANCE DATA

COMBINATION (%)	IDDB (°C)	ID WB (°C)	OUTDOOR DB (°C) -15 Q	-15 SHC	-15 SHF	-15 IPT	-7 Q	-7 SHC	-7 SHF	-7 IPT	0 Q	0 SHC	0 SHF	0 IPT	10 Q	10 SHC	10 SHF	10 IPT	15 Q	15 SHC	15 SHF	15 IPT	21 Q	21 SHC	21 SHF	21 IPT	25 Q	25 SHC	25 SHF	25 IPT	27 Q	27 SHC	27 SHF	27 IPT	30 Q	30 SHC	30 SHF	30 IPT	35 Q	35 SHC	35 SHF	35 IPT	40 Q	40 SHC	40 SHF	40 IPT	45 Q	45 SHC	45 SHF	45 IPT	50 Q	50 SHC	50 SHF	50 IPT
120%	21	18	8.13	4.88	0.60	1613	8.05	4.83	0.60	1628	7.96	4.78	0.60	1643	7.86	4.72	0.60	1656	7.78	4.67	0.60	1664	7.70	4.62	0.60	1720	7.59	4.56	0.60	1795	7.46	4.47	0.60	1917	7.28	4.37	0.60	2005	7.07	4.24	0.60	2081	6.49	3.89	0.60	2210	5.36	3.21	0.60	2295	4.42	2.65	0.60	2382
	21	20	8.47	4.06	0.48	1637	8.38	4.02	0.48	1651	8.29	3.98	0.48	1666	8.19	3.93	0.48	1680	8.10	3.89	0.48	1688	8.02	3.85	0.48	1743	7.91	3.79	0.48	1819	7.77	3.73	0.48	1940	7.58	3.64	0.48	2029	7.36	3.53	0.48	2104	6.76	3.24	0.48	2234	5.58	2.68	0.48	2318	4.60	2.21	0.48	2406
	22	18	8.38	5.37	0.64	1629	8.30	5.31	0.64	1644	8.21	5.25	0.64	1659	8.10	5.19	0.64	1673	8.02	5.14	0.64	1681	7.94	5.08	0.64	1737	7.83	5.01	0.64	1814	7.69	4.92	0.64	1936	7.51	4.81	0.64	2026	7.29	4.67	0.64	2102	6.69	4.28	0.64	2233	5.52	3.53	0.64	2318	4.55	2.92	0.64	2406
	22	20	8.64	4.49	0.52	1653	8.55	4.45	0.52	1668	8.46	4.40	0.52	1683	8.35	4.34	0.52	1696	8.27	4.30	0.52	1705	8.18	4.25	0.52	1761	8.07	4.19	0.52	1837	7.92	4.12	0.52	1960	7.74	4.02	0.52	2050	7.51	3.91	0.52	2126	6.90	3.59	0.52	2256	5.69	2.96	0.52	2342	4.69	2.44	0.52	2430
	22	22	8.79	3.51	0.40	1669	8.70	3.48	0.40	1684	8.60	3.44	0.40	1699	8.49	3.40	0.40	1713	8.41	3.36	0.40	1721	8.32	3.33	0.40	1777	8.20	3.28	0.40	1854	8.06	3.22	0.40	1976	7.87	3.15	0.40	2066	7.64	3.06	0.40	2142	7.01	2.81	0.40	2273	5.79	2.31	0.40	2358	4.77	1.91	0.40	2446
	23	18	8.55	5.82	0.68	1646	8.47	5.76	0.68	1661	8.38	5.70	0.68	1676	8.27	5.62	0.68	1690	8.19	5.57	0.68	1698	8.10	5.51	0.68	1755	7.99	5.43	0.68	1832	7.85	5.34	0.68	1956	7.66	5.21	0.68	2046	7.44	5.06	0.68	2123	6.83	4.64	0.68	2255	5.63	3.83	0.68	2341	4.65	3.16	0.68	2431
	23	20	8.82	4.94	0.56	1670	8.73	4.89	0.56	1685	8.63	4.83	0.56	1700	8.52	4.77	0.56	1714	8.44	4.73	0.56	1722	8.35	4.67	0.56	1779	8.23	4.61	0.56	1856	8.09	4.53	0.56	1980	7.90	4.42	0.56	2070	7.67	4.29	0.56	2147	7.04	3.94	0.56	2279	5.81	3.25	0.56	2365	4.79	2.68	0.56	2455
	23	22	8.97	3.95	0.44	1686	8.88	3.91	0.44	1701	8.78	3.86	0.44	1716	8.67	3.81	0.44	1730	8.58	3.78	0.44	1738	8.49	3.74	0.44	1795	8.37	3.68	0.44	1872	8.22	3.62	0.44	1996	8.03	3.53	0.44	2087	7.80	3.43	0.44	2163	7.16	3.15	0.44	2296	5.90	2.60	0.44	2382	4.87	2.14	0.44	2471
	24	18	8.73	6.28	0.72	1662	8.64	6.22	0.72	1678	8.55	6.15	0.72	1693	8.44	6.08	0.72	1707	8.36	6.02	0.72	1715	8.26	5.95	0.72	1772	8.15	5.87	0.72	1850	8.01	5.76	0.72	1976	7.82	5.63	0.72	2067	7.59	5.47	0.72	2144	6.97	5.02	0.72	2278	5.75	4.14	0.72	2365	4.74	3.41	0.72	2455
	24	20	9.00	5.40	0.60	1687	8.91	5.34	0.60	1702	8.81	5.29	0.60	1717	8.70	5.22	0.60	1731	8.61	5.17	0.60	1740	8.52	5.11	0.60	1797	8.40	5.04	0.60	1875	8.25	4.95	0.60	2000	8.06	4.83	0.60	2091	7.82	4.69	0.60	2169	7.18	4.31	0.60	2302	5.92	3.55	0.60	2389	4.89	2.93	0.60	2479
	24	22	9.15	4.39	0.48	1703	9.06	4.35	0.48	1718	8.96	4.30	0.48	1734	8.84	4.25	0.48	1747	8.76	4.20	0.48	1756	8.66	4.16	0.48	1813	8.54	4.10	0.48	1891	8.39	4.03	0.48	2016	8.19	3.93	0.48	2108	7.96	3.82	0.48	2185	7.30	3.51	0.48	2319	6.03	2.89	0.48	2406	4.97	2.39	0.48	2496
	24	24	9.28	3.34	0.36	1723	9.19	3.31	0.36	1738	9.09	3.27	0.36	1753	8.97	3.23	0.36	1767	8.88	3.20	0.36	1775	8.78	3.16	0.36	1832	8.66	3.12	0.36	1911	8.51	3.06	0.36	2036	8.31	2.99	0.36	2127	8.07	2.90	0.36	2205	7.41	2.67	0.36	2338	6.11	2.20	0.36	2425	5.04	1.81	0.36	2515
	25	18	9.00	6.84	0.76	1679	8.91	6.77	0.76	1695	8.81	6.70	0.76	1710	8.70	6.61	0.76	1724	8.61	6.55	0.76	1733	8.52	6.47	0.76	1790	8.40	6.39	0.76	1869	8.25	6.27	0.76	1995	8.06	6.13	0.76	2088	7.83	5.95	0.76	2166	7.18	5.46	0.76	2301	5.93	4.50	0.76	2389	4.89	3.72	0.76	2480
	25	20	9.27	5.94	0.64	1704	9.18	5.88	0.64	1719	9.08	5.81	0.64	1735	8.97	5.74	0.64	1748	8.88	5.68	0.64	1757	8.78	5.62	0.64	1815	8.66	5.54	0.64	1894	8.51	5.44	0.64	2020	8.31	5.32	0.64	2112	8.06	5.16	0.64	2191	7.40	4.74	0.64	2326	6.11	3.91	0.64	2413	5.04	3.22	0.64	2504
	25	22	9.43	4.90	0.52	1720	9.34	4.86	0.52	1736	9.24	4.80	0.52	1751	9.12	4.74	0.52	1765	9.03	4.69	0.52	1774	8.93	4.64	0.52	1831	8.81	4.58	0.52	1910	8.65	4.50	0.52	2037	8.45	4.39	0.52	2129	8.20	4.27	0.52	2207	7.53	3.92	0.52	2342	6.21	3.23	0.52	2430	5.12	2.66	0.52	2521
	25	24	9.56	3.83	0.40	1740	9.47	3.79	0.40	1755	9.37	3.75	0.40	1771	9.25	3.70	0.40	1785	9.15	3.66	0.40	1793	9.05	3.62	0.40	1851	8.93	3.57	0.40	1930	8.77	3.51	0.40	2056	8.57	3.43	0.40	2149	8.32	3.33	0.40	2227	7.63	3.05	0.40	2362	6.30	2.52	0.40	2450	5.20	2.08	0.40	2541
	26	18	9.28	7.42	0.80	1696	9.19	7.35	0.80	1712	9.09	7.27	0.80	1727	8.97	7.17	0.80	1741	8.88	7.10	0.80	1750	8.78	7.03	0.80	1808	8.66	6.93	0.80	1888	8.51	6.81	0.80	2016	8.31	6.65	0.80	2109	8.07	6.45	0.80	2188	7.41	5.92	0.80	2324	6.11	4.89	0.80	2413	5.04	4.03	0.80	2505
	26	20	9.56	6.50	0.68	1721	9.47	6.44	0.68	1736	9.36	6.37	0.68	1752	9.24	6.29	0.68	1766	9.15	6.22	0.68	1775	9.05	6.16	0.68	1833	8.93	6.07	0.68	1913	8.77	5.96	0.68	2040	8.56	5.82	0.68	2134	8.31	5.65	0.68	2213	7.63	5.19	0.68	2349	6.30	4.28	0.68	2438	5.19	3.53	0.68	2530
	26	22	9.72	5.45	0.56	1738	9.63	5.39	0.56	1753	9.52	5.33	0.56	1769	9.40	5.26	0.56	1783	9.31	5.21	0.56	1792	9.21	5.16	0.56	1850	9.08	5.08	0.56	1930	8.92	4.99	0.56	2057	8.71	4.88	0.56	2150	8.46	4.74	0.56	2230	7.76	4.35	0.56	2366	6.40	3.59	0.56	2455	5.28	2.96	0.56	2547
	26	24	9.86	4.34	0.44	1758	9.76	4.30	0.44	1773	9.66	4.25	0.44	1789	9.53	4.19	0.44	1803	9.44	4.15	0.44	1812	9.33	4.11	0.44	1870	9.21	4.05	0.44	1949	9.04	3.98	0.44	2077	8.83	3.89	0.44	2170	8.57	3.77	0.44	2249	7.87	3.46	0.44	2386	6.49	2.86	0.44	2474	5.36	2.36	0.44	2566
	26	26	10.02	3.21	0.32	1780	9.92	3.17	0.32	1796	9.81	3.14	0.32	1811	9.68	3.10	0.32	1825	9.59	3.07	0.32	1834	9.48	3.03	0.32	1892	9.35	2.99	0.32	1972	9.19	2.94	0.32	2100	8.97	2.87	0.32	2193	8.71	2.79	0.32	2272	8.00	2.56	0.32	2408	6.60	2.11	0.32	2497	5.44	1.74	0.32	2589
	27	18	9.47	7.95	0.84	1713	9.37	7.87	0.84	1729	9.27	7.79	0.84	1745	9.15	7.69	0.84	1759	9.06	7.61	0.84	1768	8.96	7.53	0.84	1827	8.84	7.42	0.84	1907	8.68	7.29	0.84	2036	8.48	7.12	0.84	2130	8.23	6.91	0.84	2210	7.56	6.35	0.84	2348	6.23	5.24	0.84	2437	5.14	4.32	0.84	2530
	27	19	9.66	7.53	0.78	1723	9.56	7.46	0.78	1739	9.46	7.38	0.78	1755	9.34	7.28	0.78	1769	9.25	7.21	0.78	1778	9.15	7.13	0.78	1837	9.02	7.03	0.78	1917	8.86	6.91	0.78	2046	8.65	6.75	0.78	2140	8.40	6.55	0.78	2220	7.71	6.01	0.78	2358	6.36	4.96	0.78	2447	5.25	4.09	0.78	2540
	27	20	9.76	7.02	0.72	1738	9.66	6.95	0.72	1754	9.55	6.88	0.72	1770	9.43	6.79	0.72	1784	9.34	6.72	0.72	1793	9.24	6.65	0.72	1852	9.11	6.56	0.72	1932	8.95	6.44	0.72	2061	8.74	6.29	0.72	2155	8.48	6.11	0.72	2235	7.79	5.61	0.72	2373	6.43	4.63	0.72	2462	5.30	3.82	0.72	2555
	27	22	9.92	5.95	0.60	1755	9.82	5.89	0.60	1771	9.72	5.83	0.60	1787	9.59	5.76	0.60	1801	9.50	5.70	0.60	1810	9.39	5.64	0.60	1869	9.26	5.56	0.60	1949	9.10	5.46	0.60	2078	8.89	5.33	0.60	2172	8.63	5.18	0.60	2252	7.92	4.75	0.60	2390	6.53	3.92	0.60	2479	5.39	3.23	0.60	2572
	27	24	10.06	4.83	0.48	1775	9.96	4.78	0.48	1791	9.85	4.73	0.48	1807	9.73	4.67	0.48	1821	9.63	4.62	0.48	1830	9.53	4.57	0.48	1889	9.39	4.51	0.48	1969	9.23	4.43	0.48	2098	9.01	4.33	0.48	2192	8.75	4.20	0.48	2272	8.03	3.86	0.48	2410	6.63	3.18	0.48	2499	5.47	2.62	0.48	2592
	27	26	10.22	3.68	0.36	1798	10.12	3.64	0.36	1814	10.01	3.60	0.36	1830	9.88	3.56	0.36	1844	9.78	3.52	0.36	1853	9.68	3.48	0.36	1912	9.54	3.44	0.36	1992	9.38	3.38	0.36	2121	9.16	3.30	0.36	2215	8.89	3.20	0.36	2295	8.16	2.94	0.36	2433	6.73	2.42	0.36	2522	5.55	2.00	0.36	2615
	28	18	9.56	8.41	0.88	1730	9.47	8.33	0.88	1746	9.36	8.24	0.88	1762	9.24	8.13	0.88	1777	9.15	8.05	0.88	1785	9.05	7.97	0.88	1845	8.93	7.86	0.88	1926	8.77	7.72	0.88	2056	8.56	7.54	0.88	2151	8.31	7.32	0.88	2232	7.63	6.72	0.88	2371	6.30	5.54	0.88	2462	5.19	4.57	0.88	2556
	28	20	9.76	7.41	0.76	1756	9.66	7.34	0.76	1772	9.55	7.26	0.76	1787	9.43	7.17	0.76	1802	9.34	7.10	0.76	1811	9.24	7.02	0.76	1870	9.11	6.92	0.76	1951	8.95	6.80	0.76	2082	8.74	6.64	0.76	2177	8.48	6.45	0.76	2257	7.79	5.92	0.76	2396	6.43	4.88	0.76	2487	5.30	4.03	0.76	2581
	28	22	9.85	6.31	0.64	1773	9.76	6.24	0.64	1789	9.65	6.18	0.64	1805	9.53	6.10	0.64	1819	9.43	6.04	0.64	1828	9.33	5.97	0.64	1887	9.20	5.89	0.64	1969	9.04	5.78	0.64	2099	8.83	5.65	0.64	2194	8.57	5.48	0.64	2275	7.87	5.03	0.64	2414	6.49	4.15	0.64	2504	5.35	3.43	0.64	2598
	28	24	10.02	5.21	0.52	1793	9.92	5.16	0.52	1809	9.81	5.10	0.52	1825	9.69	5.04	0.52	1839	9.59	4.99	0.52	1848	9.49	4.93	0.52	1907	9.36	4.87	0.52	1989	9.19	4.78	0.52	2119	8.98	4.67	0.52	2214	8.71	4.53	0.52	2295	8.00	4.16	0.52	2434	6.60	3.43	0.52	2524	5.44	2.83	0.52	2618
	28	26	10.16	4.06	0.40	1816	10.06	4.02	0.40	1832	9.95	3.98	0.40	1848	9.82	3.93	0.40	1862	9.73	3.89	0.40	1871	9.62	3.85	0.40	1931	9.49	3.80	0.40	2012	9.32	3.73	0.40	2142	9.10	3.64	0.40	2237	8.84	3.53	0.40	2318	8.11	3.24	0.40	2457	6.69	2.68	0.40	2548	5.52	2.21	0.40	2641
	29	18	9.66	8.69	0.90	1748	9.56	8.60	0.90	1764	9.46	8.51	0.90	1780	9.34	8.40	0.90	1794	9.24	8.32	0.90	1803	9.14	8.23	0.90	1863	9.02	8.11	0.90	1945	8.86	7.97	0.90	2077	8.65	7.78	0.90	2173	8.40	7.56	0.90	2254	7.71	6.94	0.90	2395	6.36	5.72	0.90	2486	5.25	4.72	0.90	2581
	29	20	9.85	7.88	0.80	1773	9.76	7.80	0.80	1789	9.65	7.72	0.80	1805	9.53	7.62	0.80	1820	9.43	7.55	0.80	1829	9.33	7.46	0.80	1889	9.20	7.36	0.80	1971	9.04	7.23	0.80	2102	8.83	7.06	0.80	2198	8.57	6.86	0.80	2280	7.87	6.29	0.80	2420	6.49	5.19	0.80	2512	5.35	4.28	0.80	2607
	29	22	10.05	6.83	0.68	1791	9.95	6.77	0.68	1807	9.84	6.69	0.68	1823	9.72	6.61	0.68	1837	9.62	6.54	0.68	1846	9.52	6.47	0.68	1906	9.38	6.38	0.68	1988	9.22	6.27	0.68	2120	9.00	6.12	0.68	2216	8.74	5.94	0.68	2297	8.02	5.46	0.68	2438	6.62	4.50	0.68	2529	5.46	3.71	0.68	2624
	29	24	10.12	5.67	0.56	1811	10.02	5.61	0.56	1827	9.91	5.55	0.56	1843	9.78	5.48	0.56	1858	9.69	5.43	0.56	1867	9.58	5.37	0.56	1927	9.45	5.29	0.56	2009	9.28	5.20	0.56	2140	9.07	5.08	0.56	2236	8.80	4.93	0.56	2318	8.08	4.52	0.56	2458	6.67	3.73	0.56	2550	5.50	3.08	0.56	2644
	29	26	10.26	4.52	0.44	1834	10.16	4.47	0.44	1850	10.05	4.42	0.44	1867	9.92	4.37	0.44	1881	9.82	4.32	0.44	1890	9.72	4.28	0.44	1950	9.58	4.22	0.44	2032	9.41	4.14	0.44	2164	9.19	4.04	0.44	2260	8.92	3.93	0.44	2341	8.19	3.60	0.44	2482	6.76	2.97	0.44	2573	5.58	2.45	0.44	2668
	30	18	9.75	8.78	0.90	1765	9.66	8.69	0.90	1781	9.55	8.60	0.90	1798	9.43	8.49	0.90	1812	9.34	8.40	0.90	1821	9.23	8.31	0.90	1882	9.11	8.20	0.90	1965	8.95	8.05	0.90	2098	8.74	7.86	0.90	2195	8.48	7.63	0.90	2277	7.79	7.01	0.90	2419	6.42	5.78	0.90	2511	5.30	4.77	0.90	2607
	30	20	9.95	8.36	0.84	1791	9.85	8.28	0.84	1807	9.75	8.19	0.84	1823	9.62	8.08	0.84	1838	9.53	8.00	0.84	1847	9.42	7.91	0.84	1908	9.29	7.81	0.84	1991	9.13	7.67	0.84	2123	8.91	7.49	0.84	2220	8.65	7.27	0.84	2303	7.94	6.67	0.84	2445	6.55	5.51	0.84	2537	5.41	4.54	0.84	2633
	30	22	10.15	7.31	0.72	1809	10.05	7.24	0.72	1825	9.94	7.16	0.72	1841	9.81	7.07	0.72	1855	9.72	7.00	0.72	1865	9.61	6.92	0.72	1925	9.48	6.82	0.72	2008	9.31	6.70	0.72	2141	9.09	6.55	0.72	2238	8.83	6.36	0.72	2320	8.10	5.83	0.72	2462	6.69	4.81	0.72	2554	5.52	3.97	0.72	2650
	30	24	10.22	6.13	0.60	1829	10.12	6.07	0.60	1845	10.01	6.01	0.60	1862	9.88	5.93	0.60	1876	9.78	5.87	0.60	1885	9.68	5.81	0.60	1946	9.54	5.73	0.60	2029	9.38	5.63	0.60	2162	9.16	5.49	0.60	2259	8.89	5.33	0.60	2341	8.16	4.90	0.60	2483	6.73	4.04	0.60	2575	5.55	3.33	0.60	2671
	30	26	10.37	4.98	0.48	1853	10.26	4.93	0.48	1869	10.15	4.87	0.48	1885	10.02	4.81	0.48	1900	9.92	4.76	0.48	1909	9.81	4.71	0.48	1969	9.68	4.65	0.48	2052	9.51	4.56	0.48	2185	9.28	4.46	0.48	2282	9.01	4.33	0.48	2365	8.27	3.97	0.48	2506	6.83	3.28	0.48	2599	5.63	2.70	0.48	2695
	31	18	9.85	8.87	0.90	1783	9.75	8.78	0.90	1799	9.65	8.68	0.90	1816	9.52	8.57	0.90	1830	9.43	8.49	0.90	1840	9.33	8.39	0.90	1901	9.20	8.28	0.90	1985	9.03	8.13	0.90	2119	8.82	7.94	0.90	2217	8.57	7.71	0.90	2300	7.86	7.08	0.90	2443	6.49	5.84	0.90	2536	5.35	4.82	0.90	2633
	31	20	10.05	8.85	0.88	1809	9.95	8.76	0.88	1825	9.84	8.66	0.88	1842	9.72	8.55	0.88	1856	9.62	8.47	0.88	1866	9.52	8.37	0.88	1927	9.39	8.26	0.88	2011	9.22	8.11	0.88	2145	9.00	7.92	0.88	2243	8.74	7.69	0.88	2326	8.02	7.06	0.88	2469	6.62	5.83	0.88	2562	5.46	4.81	0.88	2659
	31	22	10.25	7.79	0.76	1827	10.15	7.71	0.76	1843	10.04	7.63	0.76	1859	9.91	7.53	0.76	1874	9.81	7.46	0.76	1883	9.71	7.38	0.76	1944	9.57	7.28	0.76	2028	9.40	7.15	0.76	2162	9.18	6.98	0.76	2260	8.92	6.78	0.76	2344	8.18	6.22	0.76	2487	6.75	5.13	0.76	2580	5.57	4.23	0.76	2677
	31	24	10.32	6.61	0.64	1847	10.22	6.54	0.64	1864	10.11	6.47	0.64	1880	9.98	6.39	0.64	1895	9.88	6.33	0.64	1904	9.78	6.26	0.64	1965	9.64	6.17	0.64	2049	9.47	6.06	0.64	2183	9.25	5.92	0.64	2281	8.98	5.75	0.64	2364	8.24	5.28	0.64	2508	6.80	4.35	0.64	2601	5.61	3.59	0.64	2698
	31	26	10.47	5.44	0.52	1871	10.37	5.39	0.52	1888	10.25	5.33	0.52	1904	10.12	5.26	0.52	1919	10.02	5.21	0.52	1928	9.91	5.15	0.52	1989	9.78	5.08	0.52	2073	9.60	4.99	0.52	2207	9.38	4.88	0.52	2305	9.10	4.73	0.52	2388	8.36	4.35	0.52	2531	6.90	3.59	0.52	2625	5.69	2.96	0.52	2722
	32	18	9.95	8.95	0.90	1801	9.85	8.87	0.90	1817	9.74	8.77	0.90	1834	9.62	8.66	0.90	1849	9.52	8.57	0.90	1858	9.42	8.48	0.90	1920	9.29	8.36	0.90	2004	9.13	8.21	0.90	2140	8.91	8.02	0.90	2239	8.65	7.79	0.90	2323	7.94	7.15	0.90	2467	6.55	5.90	0.90	2562	5.41	4.87	0.90	2659
	32	20	10.15	9.14	0.90	1827	10.05	9.05	0.90	1843	9.94	8.95	0.90	1860	9.81	8.83	0.90	1875	9.72	8.75	0.90	1884	9.61	8.65	0.90	1946	9.48	8.53	0.90	2031	9.31	8.38	0.90	2166	9.09	8.18	0.90	2265	8.83	7.95	0.90	2349	8.10	7.29	0.90	2494	6.69	6.02	0.90	2588	5.52	4.96	0.90	2686
	32	22	10.36	8.28	0.80	1845	10.25	8.20	0.80	1861	10.14	8.11	0.80	1878	10.01	8.01	0.80	1893	9.91	7.93	0.80	1902	9.80	7.84	0.80	1964	9.67	7.74	0.80	2049	9.50	7.60	0.80	2184	9.28	7.42	0.80	2283	9.01	7.20	0.80	2367	8.27	6.61	0.80	2

4. CAPACITIES AND SELECTION DATA

| | | | Cooling Operation PERFORMANCE DATA | | |

4. CAPACITIES AND SELECTION DATA

Cooling Operation PERFORMANCE DATA

COMBINATION (%)	IDDB (°C)	ID WB (°C)	OUTDOOR DB (°C) -15 Q	-15 SHC	-15 SHF	-15 IPT	-7 Q	-7 SHC	-7 SHF	-7 IPT	0 Q	0 SHC	0 SHF	0 IPT	10 Q	10 SHC	10 SHF	10 IPT	15 Q	15 SHC	15 SHF	15 IPT	21 Q	21 SHC	21 SHF	21 IPT	25 Q	25 SHC	25 SHF	25 IPT	27 Q	27 SHC	27 SHF	27 IPT	30 Q	30 SHC	30 SHF	30 IPT	35 Q	35 SHC	35 SHF	35 IPT	40 Q	40 SHC	40 SHF	40 IPT	45 Q	45 SHC	45 SHF	45 IPT	50 Q	50 SHC	50 SHF	50 IPT
100%	21	18	7.74	4.65	0.60	1558	7.67	4.60	0.60	1572	7.58	4.55	0.60	1587	7.49	4.49	0.60	1600	7.41	4.45	0.60	1608	7.33	4.40	0.60	1661	7.23	4.34	0.60	1734	7.10	4.26	0.60	1852	6.94	4.16	0.60	1937	6.73	4.04	0.60	2010	6.18	3.71	0.60	2135	5.10	3.06	0.60	2217	4.21	2.52	0.60	2301
	21	20	8.06	3.87	0.48	1582	7.98	3.83	0.48	1596	7.90	3.79	0.48	1610	7.80	3.74	0.48	1623	7.72	3.70	0.48	1631	7.63	3.66	0.48	1685	7.53	3.61	0.48	1758	7.40	3.55	0.48	1875	7.22	3.47	0.48	1961	7.01	3.37	0.48	2034	6.44	3.09	0.48	2159	5.31	2.55	0.48	2240	4.38	2.10	0.48	2325
	22	18	7.98	5.11	0.64	1574	7.90	5.06	0.64	1588	7.82	5.00	0.64	1603	7.72	4.94	0.64	1616	7.64	4.89	0.64	1624	7.56	4.84	0.64	1678	7.45	4.77	0.64	1752	7.32	4.69	0.64	1870	7.15	4.58	0.64	1957	6.94	4.44	0.64	2030	6.37	4.08	0.64	2157	5.26	3.37	0.64	2239	4.34	2.78	0.64	2325
	22	20	8.23	4.28	0.52	1598	8.15	4.24	0.52	1612	8.06	4.19	0.52	1627	7.95	4.14	0.52	1640	7.88	4.10	0.52	1648	7.79	4.05	0.52	1702	7.68	4.00	0.52	1776	7.55	3.92	0.52	1894	7.37	3.83	0.52	1981	7.16	3.72	0.52	2054	6.57	3.42	0.52	2181	5.42	2.82	0.52	2263	4.47	2.32	0.52	2348
	22	22	8.37	3.35	0.40	1614	8.29	3.31	0.40	1628	8.20	3.28	0.40	1643	8.09	3.24	0.40	1656	8.01	3.20	0.40	1664	7.92	3.17	0.40	1718	7.81	3.13	0.40	1792	7.68	3.07	0.40	1910	7.50	3.00	0.40	1997	7.28	2.91	0.40	2070	6.68	2.67	0.40	2197	5.51	2.20	0.40	2279	4.55	1.82	0.40	2365
	23	18	8.15	5.54	0.68	1590	8.07	5.49	0.68	1604	7.98	5.43	0.68	1619	7.88	5.36	0.68	1632	7.80	5.30	0.68	1640	7.71	5.24	0.68	1695	7.61	5.17	0.68	1770	7.47	5.08	0.68	1889	7.30	4.96	0.68	1977	7.08	4.82	0.68	2051	6.50	4.42	0.68	2179	5.37	3.65	0.68	2262	4.43	3.01	0.68	2348
	23	20	8.40	4.70	0.56	1614	8.31	4.66	0.56	1628	8.22	4.60	0.56	1643	8.12	4.55	0.56	1656	8.04	4.50	0.56	1664	7.95	4.45	0.56	1719	7.84	4.39	0.56	1794	7.70	4.31	0.56	1913	7.52	4.21	0.56	2001	7.30	4.09	0.56	2075	6.70	3.75	0.56	2203	5.53	3.10	0.56	2286	4.56	2.55	0.56	2372
	23	22	8.54	3.76	0.44	1630	8.45	3.72	0.44	1645	8.36	3.68	0.44	1659	8.26	3.63	0.44	1672	8.17	3.60	0.44	1681	8.08	3.56	0.44	1735	7.97	3.51	0.44	1810	7.83	3.45	0.44	1930	7.65	3.37	0.44	2017	7.43	3.27	0.44	2091	6.82	3.00	0.44	2219	5.62	2.47	0.44	2302	4.64	2.04	0.44	2388
	24	18	8.31	5.99	0.72	1606	8.23	5.93	0.72	1621	8.14	5.86	0.72	1635	8.04	5.79	0.72	1649	7.96	5.73	0.72	1657	7.87	5.67	0.72	1712	7.76	5.59	0.72	1788	7.62	5.49	0.72	1908	7.45	5.36	0.72	1997	7.23	5.20	0.72	2072	6.64	4.78	0.72	2201	5.47	3.94	0.72	2285	4.52	3.25	0.72	2372
	24	20	8.57	5.14	0.60	1630	8.48	5.09	0.60	1645	8.39	5.03	0.60	1660	8.28	4.97	0.60	1673	8.20	4.92	0.60	1681	8.11	4.87	0.60	1736	8.00	4.80	0.60	1812	7.86	4.71	0.60	1933	7.67	4.60	0.60	2021	7.45	4.47	0.60	2096	6.84	4.10	0.60	2225	5.64	3.39	0.60	2309	4.66	2.79	0.60	2396
	24	22	8.71	4.18	0.48	1647	8.63	4.14	0.48	1661	8.53	4.10	0.48	1676	8.42	4.04	0.48	1689	8.34	4.00	0.48	1698	8.25	3.96	0.48	1753	8.14	3.91	0.48	1828	7.99	3.84	0.48	1949	7.80	3.75	0.48	2037	7.58	3.64	0.48	2112	6.96	3.34	0.48	2241	5.74	2.75	0.48	2325	4.73	2.27	0.48	2413
	24	24	8.84	3.18	0.36	1666	8.75	3.15	0.36	1681	8.65	3.11	0.36	1696	8.54	3.07	0.36	1709	8.46	3.04	0.36	1717	8.36	3.01	0.36	1772	8.25	2.97	0.36	1848	8.10	2.92	0.36	1969	7.91	2.85	0.36	2057	7.68	2.77	0.36	2132	7.05	2.54	0.36	2261	5.82	2.09	0.36	2345	4.80	1.73	0.36	2432
	25	18	8.57	6.51	0.76	1622	8.49	6.45	0.76	1637	8.39	6.38	0.76	1652	8.29	6.30	0.76	1665	8.20	6.23	0.76	1674	8.11	6.17	0.76	1729	8.00	6.08	0.76	1806	7.86	5.97	0.76	1928	7.68	5.83	0.76	2017	7.45	5.66	0.76	2093	6.84	5.20	0.76	2223	5.64	4.29	0.76	2308	4.66	3.54	0.76	2396
	25	20	8.83	5.65	0.64	1647	8.75	5.60	0.64	1661	8.65	5.54	0.64	1676	8.54	5.46	0.64	1690	8.45	5.41	0.64	1698	8.36	5.35	0.64	1754	8.25	5.28	0.64	1830	8.10	5.18	0.64	1952	7.91	5.06	0.64	2041	7.68	4.92	0.64	2117	7.05	4.51	0.64	2247	5.82	3.72	0.64	2332	4.80	3.07	0.64	2420
	25	22	8.98	4.67	0.52	1663	8.89	4.62	0.52	1678	8.80	4.57	0.52	1693	8.68	4.52	0.52	1706	8.60	4.47	0.52	1715	8.50	4.42	0.52	1771	8.39	4.36	0.52	1847	8.24	4.28	0.52	1969	8.05	4.18	0.52	2058	7.81	4.06	0.52	2134	7.17	3.73	0.52	2264	5.92	3.08	0.52	2349	4.88	2.54	0.52	2437
	25	24	9.11	3.64	0.40	1683	9.02	3.61	0.40	1698	8.92	3.57	0.40	1713	8.81	3.52	0.40	1726	8.72	3.49	0.40	1734	8.62	3.45	0.40	1790	8.50	3.40	0.40	1866	8.35	3.34	0.40	1988	8.16	3.26	0.40	2078	7.92	3.17	0.40	2153	7.27	2.91	0.40	2284	6.00	2.40	0.40	2368	4.95	1.98	0.40	2457
	26	18	8.84	7.07	0.80	1638	8.75	7.00	0.80	1653	8.65	6.92	0.80	1669	8.54	6.83	0.80	1682	8.46	6.77	0.80	1691	8.36	6.69	0.80	1747	8.25	6.60	0.80	1824	8.10	6.48	0.80	1947	7.91	6.33	0.80	2037	7.68	6.15	0.80	2114	7.05	5.64	0.80	2245	5.82	4.66	0.80	2331	4.80	3.84	0.80	2420
	26	20	9.11	6.19	0.68	1663	9.02	6.13	0.68	1678	8.92	6.06	0.68	1693	8.80	5.99	0.68	1707	8.72	5.93	0.68	1715	8.62	5.86	0.68	1772	8.50	5.78	0.68	1849	8.35	5.68	0.68	1972	8.16	5.55	0.68	2062	7.92	5.38	0.68	2138	7.27	4.94	0.68	2270	6.00	4.08	0.68	2356	4.95	3.36	0.68	2445
	26	22	9.26	5.19	0.56	1680	9.17	5.13	0.56	1695	9.07	5.08	0.56	1710	8.95	5.01	0.56	1724	8.86	4.96	0.56	1732	8.77	4.91	0.56	1788	8.65	4.84	0.56	1865	8.49	4.76	0.56	1989	8.29	4.64	0.56	2079	8.05	4.51	0.56	2155	7.39	4.14	0.56	2287	6.10	3.42	0.56	2373	5.03	2.82	0.56	2462
	26	24	9.39	4.13	0.44	1700	9.30	4.09	0.44	1715	9.20	4.05	0.44	1730	9.08	3.99	0.44	1743	8.99	3.95	0.44	1752	8.89	3.91	0.44	1808	8.77	3.86	0.44	1885	8.61	3.79	0.44	2009	8.41	3.70	0.44	2099	8.17	3.59	0.44	2175	7.50	3.30	0.44	2307	6.18	2.72	0.44	2392	5.10	2.24	0.44	2481
	26	26	9.54	3.05	0.32	1723	9.45	3.02	0.32	1738	9.34	2.99	0.32	1753	9.22	2.95	0.32	1766	9.13	2.92	0.32	1775	9.03	2.89	0.32	1831	8.91	2.85	0.32	1908	8.75	2.80	0.32	2031	8.55	2.73	0.32	2121	8.30	2.65	0.32	2198	7.62	2.44	0.32	2329	6.28	2.01	0.32	2415	5.18	1.66	0.32	2504
	27	18	9.02	7.57	0.84	1655	8.93	7.50	0.84	1670	8.83	7.42	0.84	1685	8.72	7.32	0.84	1699	8.63	7.25	0.84	1708	8.54	7.17	0.84	1764	8.42	7.07	0.84	1842	8.27	6.95	0.84	1967	8.08	6.78	0.84	2058	7.84	6.59	0.84	2135	7.20	6.05	0.84	2268	5.94	4.99	0.84	2355	4.90	4.11	0.84	2444
	27	19	9.20	7.18	0.78	1665	9.11	7.10	0.78	1680	9.01	7.03	0.78	1695	8.89	6.94	0.78	1709	8.81	6.87	0.78	1718	8.71	6.79	0.78	1774	8.59	6.70	0.78	1852	8.44	6.58	0.78	1977	8.24	6.43	0.78	2068	8.00	6.24	0.78	2145	7.34	5.73	0.78	2278	6.06	4.73	0.78	2365	5.00	3.90	0.78	2454
	27	20	9.29	6.69	0.72	1680	9.20	6.62	0.72	1695	9.10	6.55	0.72	1710	8.98	6.47	0.72	1724	8.89	6.40	0.72	1733	8.80	6.33	0.72	1789	8.68	6.25	0.72	1867	8.52	6.14	0.72	1992	8.32	5.99	0.72	2083	8.08	5.82	0.72	2160	7.42	5.34	0.72	2293	6.12	4.41	0.72	2380	5.05	3.63	0.72	2469
	27	22	9.45	5.67	0.60	1697	9.36	5.61	0.60	1712	9.25	5.55	0.60	1727	9.14	5.48	0.60	1741	9.04	5.43	0.60	1750	8.95	5.37	0.60	1806	8.82	5.29	0.60	1884	8.67	5.20	0.60	2009	8.46	5.08	0.60	2100	8.22	4.93	0.60	2177	7.54	4.53	0.60	2310	6.22	3.73	0.60	2397	5.13	3.08	0.60	2486
	27	24	9.58	4.60	0.48	1717	9.49	4.55	0.48	1732	9.38	4.50	0.48	1747	9.26	4.45	0.48	1761	9.17	4.40	0.48	1770	9.07	4.35	0.48	1826	8.95	4.29	0.48	1904	8.79	4.22	0.48	2029	8.58	4.12	0.48	2120	8.33	4.00	0.48	2197	7.65	3.67	0.48	2330	6.31	3.03	0.48	2417	5.21	2.50	0.48	2506
	27	26	9.74	3.50	0.36	1740	9.64	3.47	0.36	1755	9.53	3.43	0.36	1770	9.41	3.39	0.36	1784	9.32	3.35	0.36	1793	9.22	3.32	0.36	1849	9.09	3.27	0.36	1927	8.93	3.21	0.36	2052	8.72	3.14	0.36	2143	8.47	3.05	0.36	2220	7.77	2.80	0.36	2353	6.41	2.31	0.36	2440	5.29	1.90	0.36	2529
	28	18	9.11	8.01	0.88	1672	9.02	7.93	0.88	1687	8.92	7.85	0.88	1702	8.80	7.75	0.88	1716	8.72	7.67	0.88	1725	8.62	7.59	0.88	1782	8.50	7.48	0.88	1861	8.35	7.35	0.88	1986	8.16	7.18	0.88	2078	7.92	6.97	0.88	2156	7.27	6.40	0.88	2291	6.00	5.28	0.88	2378	4.95	4.35	0.88	2469
	28	20	9.29	7.06	0.76	1697	9.20	6.99	0.76	1712	9.10	6.92	0.76	1728	8.98	6.83	0.76	1741	8.89	6.76	0.76	1750	8.80	6.69	0.76	1807	8.68	6.59	0.76	1886	8.52	6.48	0.76	2012	8.32	6.33	0.76	2104	8.08	6.14	0.76	2182	7.42	5.64	0.76	2316	6.12	4.65	0.76	2403	5.05	3.84	0.76	2494
	28	22	9.38	6.01	0.64	1714	9.29	5.95	0.64	1729	9.19	5.88	0.64	1745	9.07	5.81	0.64	1759	8.98	5.75	0.64	1767	8.88	5.69	0.64	1825	8.76	5.61	0.64	1903	8.61	5.51	0.64	2029	8.41	5.38	0.64	2121	8.16	5.22	0.64	2199	7.49	4.79	0.64	2333	6.18	3.96	0.64	2421	5.10	3.26	0.64	2511
	28	24	9.54	4.96	0.52	1734	9.45	4.91	0.52	1749	9.35	4.86	0.52	1765	9.23	4.80	0.52	1779	9.14	4.75	0.52	1787	9.04	4.70	0.52	1845	8.91	4.63	0.52	1923	8.75	4.55	0.52	2049	8.55	4.45	0.52	2141	8.30	4.32	0.52	2219	7.62	3.96	0.52	2353	6.29	3.27	0.52	2441	5.19	2.70	0.52	2531
	28	26	9.68	3.87	0.40	1757	9.58	3.83	0.40	1773	9.48	3.79	0.40	1788	9.36	3.74	0.40	1802	9.26	3.71	0.40	1811	9.16	3.67	0.40	1868	9.04	3.61	0.40	1947	8.88	3.55	0.40	2072	8.67	3.47	0.40	2164	8.42	3.37	0.40	2242	7.73	3.09	0.40	2377	6.37	2.55	0.40	2464	5.26	2.10	0.40	2555
	29	18	9.20	8.28	0.90	1688	9.11	8.20	0.90	1704	9.01	8.11	0.90	1719	8.89	8.00	0.90	1733	8.80	7.92	0.90	1742	8.71	7.84	0.90	1800	8.59	7.73	0.90	1879	8.44	7.59	0.90	2006	8.24	7.41	0.90	2099	8.00	7.20	0.90	2178	7.34	6.61	0.90	2314	6.06	5.45	0.90	2402	5.00	4.50	0.90	2494
	29	20	9.38	7.51	0.80	1714	9.29	7.43	0.80	1729	9.19	7.35	0.80	1745	9.07	7.26	0.80	1759	8.98	7.19	0.80	1768	8.88	7.11	0.80	1825	8.76	7.01	0.80	1905	8.61	6.89	0.80	2032	8.41	6.72	0.80	2125	8.16	6.53	0.80	2203	7.49	5.99	0.80	2339	6.18	4.94	0.80	2427	5.10	4.08	0.80	2519
	29	22	9.57	6.51	0.68	1731	9.48	6.44	0.68	1747	9.37	6.37	0.68	1762	9.25	6.29	0.68	1776	9.16	6.23	0.68	1785	9.06	6.16	0.68	1843	8.94	6.08	0.68	1922	8.78	5.97	0.68	2049	8.57	5.83	0.68	2142	8.32	5.66	0.68	2221	7.64	5.20	0.68	2356	6.30	4.29	0.68	2445	5.20	3.54	0.68	2536
	29	24	9.64	5.40	0.56	1752	9.54	5.34	0.56	1767	9.44	5.29	0.56	1783	9.32	5.22	0.56	1796	9.23	5.17	0.56	1805	9.13	5.11	0.56	1863	9.00	5.04	0.56	1943	8.84	4.95	0.56	2070	8.63	4.84	0.56	2162	8.38	4.69	0.56	2241	7.70	4.31	0.56	2377	6.35	3.56	0.56	2465	5.24	2.93	0.56	2557
	29	26	9.77	4.30	0.44	1775	9.68	4.26	0.44	1790	9.57	4.21	0.44	1806	9.45	4.16	0.44	1820	9.36	4.12	0.44	1829	9.25	4.07	0.44	1887	9.13	4.02	0.44	1966	8.96	3.94	0.44	2093	8.75	3.85	0.44	2186	8.50	3.74	0.44	2265	7.80	3.43	0.44	2400	6.44	2.83	0.44	2489	5.31	2.34	0.44	2580
	30	18	9.29	8.36	0.90	1705	9.20	8.28	0.90	1721	9.10	8.19	0.90	1736	8.98	8.08	0.90	1751	8.89	8.00	0.90	1759	8.79	7.91	0.90	1818	8.67	7.81	0.90	1898	8.52	7.67	0.90	2026	8.32	7.49	0.90	2120	8.08	7.27	0.90	2200	7.42	6.67	0.90	2337	6.12	5.51	0.90	2426	5.05	4.54	0.90	2518
	30	20	9.48	7.96	0.84	1731	9.38	7.88	0.84	1747	9.28	7.80	0.84	1762	9.16	7.70	0.84	1776	9.07	7.62	0.84	1785	8.97	7.54	0.84	1844	8.85	7.43	0.84	1924	8.69	7.30	0.84	2052	8.49	7.13	0.84	2146	8.24	6.92	0.84	2225	7.57	6.36	0.84	2362	6.24	5.24	0.84	2452	5.15	4.33	0.84	2544
	30	22	9.67	6.96	0.72	1748	9.57	6.89	0.72	1764	9.47	6.82	0.72	1780	9.35	6.73	0.72	1794	9.25	6.66	0.72	1803	9.15	6.59	0.72	1861	9.03	6.50	0.72	1941	8.87	6.38	0.72	2070	8.66	6.23	0.72	2163	8.41	6.05	0.72	2243	7.72	5.56	0.72	2380	6.37	4.58	0.72	2469	5.25	3.78	0.72	2562
	30	24	9.74	5.84	0.60	1769	9.64	5.78	0.60	1785	9.53	5.72	0.60	1800	9.41	5.65	0.60	1814	9.32	5.59	0.60	1823	9.22	5.53	0.60	1882	9.09	5.45	0.60	1962	8.93	5.36	0.60	2090	8.72	5.23	0.60	2184	8.47	5.08	0.60	2264	7.77	4.66	0.60	2401	6.41	3.85	0.60	2490	5.29	3.17	0.60	2582
	30	26	9.87	4.74	0.48	1793	9.77	4.69	0.48	1808	9.67	4.64	0.48	1824	9.54	4.58	0.48	1838	9.45	4.54	0.48	1847	9.35	4.49	0.48	1906	9.22	4.42	0.48	1986	9.05	4.35	0.48	2114	8.84	4.24	0.48	2208	8.58	4.12	0.48	2287	7.88	3.78	0.48	2424	6.50	3.12	0.48	2513	5.36	2.57	0.48	2606
	31	18	9.38	8.44	0.90	1722	9.29	8.36	0.90	1738	9.19	8.27	0.90	1754	9.07	8.16	0.90	1768	8.98	8.08	0.90	1777	8.88	7.99	0.90	1836	8.76	7.88	0.90	1917	8.60	7.74	0.90	2047	8.40	7.56	0.90	2141	8.16	7.34	0.90	2222	7.49	6.74	0.90	2360	6.18	5.56	0.90	2450	5.10	4.59	0.90	2544
	31	20	9.57	8.42	0.88	1748	9.48	8.34	0.88	1764	9.38	8.25	0.88	1780	9.25	8.14	0.88	1794	9.16	8.06	0.88	1803	9.06	7.98	0.88	1862	8.94	7.87	0.88	1943	8.78	7.73	0.88	2073	8.57	7.55	0.88	2167	8.32	7.33	0.88	2248	7.64	6.73	0.88	2386	6.30	5.55	0.88	2476	5.20	4.58	0.88	2570
	31	22	9.76	7.42	0.76	1766	9.67	7.35	0.76	1782	9.56	7.27	0.76	1798	9.44	7.17	0.76	1812	9.35	7.10	0.76	1821	9.24	7.03	0.76	1880	9.12	6.93	0.76	1961	8.96	6.81	0.76	2090	8.75	6.65	0.76	2185	8.49	6.45	0.76	2265	7.80	5.92	0.76	2404	6.43	4.89	0.76	2494	5.31	4.03	0.76	2587
	31	24	9.83	6.29	0.64	1787	9.74	6.23	0.64	1802	9.63	6.16	0.64	1818	9.51	6.08	0.64	1833	9.41	6.02	0.64	1842	9.31	5.96	0.64	1901	9.18	5.88	0.64	1982	9.02	5.77	0.64	2111	8.81	5.64	0.64	2206	8.55	5.47	0.64	2286	7.85	5.02	0.64	2425	6.48	4.14	0.64	2515	5.34	3.42	0.64	2608
	31	26	9.97	5.18	0.52	1811	9.87	5.13	0.52	1826	9.76	5.08	0.52	1842	9.64	5.01	0.52	1857	9.54	4.96	0.52	1865	9.44	4.91	0.52	1925	9.31	4.84	0.52	2006	9.15	4.76	0.52	2135	8.93	4.64	0.52	2230	8.67	4.51	0.52	2310	7.96	4.14	0.52	2449	6.57	3.41	0.52	2539	5.42	2.82	0.52	2632
	32	18	9.48	8.53	0.90	1739	9.38	8.44	0.90	1755	9.28	8.35	0.90	1771	9.16	8.24	0.90	1786	9.07	8.16	0.90	1795	8.97	8.07	0.90	1854	8.85	7.96	0.90	1936	8.69	7.82	0.90	2067	8.49	7.64	0.90	2163	8.24	7.42	0.90	2244	7.56	6.81	0.90	2384	6.24	5.62	0.90	2475	5.15	4.63	0.90	2569
	32	20	9.67	8.70	0.90	1766	9.57	8.62	0.90	1782	9.47	8.52	0.90	1798	9.35	8.41	0.90	1812	9.25	8.33	0.90	1821	9.15	8.24	0.90	1881	9.03	8.13	0.90	1963	8.87	7.98	0.90	2093	8.66	7.79	0.90	2189	8.41	7.57	0.90	2270	7.72	6.95	0.90	2410	6.37	5.73	0.90	2501	5.25	4.73	0.90	2595
	32	22	9.86	7.89	0.80	1784	9.76	7.81	0.80	1799	9.66	7.73	0.80	1816	9.53	7.63	0.80	1830	9.44	7.55	0.80	1839	9.34	7.47	0.80	1899	9.21	7.37	0.80	1980	9.05	7.24	0.80	2111	8.83	7.07	0.80	2207	8.58	6.86	0.80	2288	7.87	6.30	0.80	2

4. CAPACITIES AND SELECTION DATA

Cooling Operation PERFORMANCE DATA

COMBINATION (%)	IDDB (°C)	ID WB (°C)	OUTDOOR DB (°C) -15 Q	-15 SHC	-15 SHF	-15 IPT	-7 Q	-7 SHC	-7 SHF	-7 IPT	0 Q	0 SHC	0 SHF	0 IPT	10 Q	10 SHC	10 SHF	10 IPT	15 Q	15 SHC	15 SHF	15 IPT	21 Q	21 SHC	21 SHF	21 IPT	25 Q	25 SHC	25 SHF	25 IPT	27 Q	27 SHC	27 SHF	27 IPT	30 Q	30 SHC	30 SHF	30 IPT	35 Q	35 SHC	35 SHF	35 IPT	40 Q	40 SHC	40 SHF	40 IPT	45 Q	45 SHC	45 SHF	45 IPT	50 Q	50 SHC	50 SHF	50 IPT
90%	21	18	7.59	4.55	0.60	1543	7.51	4.51	0.60	1557	7.43	4.46	0.60	1571	7.34	4.40	0.60	1584	7.26	4.36	0.60	1592	7.19	4.31	0.60	1645	7.09	4.25	0.60	1717	6.96	4.18	0.60	1833	6.80	4.08	0.60	1918	6.60	3.96	0.60	1990	6.06	3.64	0.60	2114	5.00	3.00	0.60	2195	4.12	2.47	0.60	2278
	21	20	7.90	3.79	0.48	1566	7.82	3.76	0.48	1580	7.74	3.71	0.48	1594	7.64	3.67	0.48	1607	7.56	3.63	0.48	1615	7.48	3.59	0.48	1668	7.38	3.54	0.48	1741	7.25	3.48	0.48	1857	7.08	3.40	0.48	1941	6.87	3.30	0.48	2013	6.31	3.03	0.48	2137	5.20	2.50	0.48	2218	4.29	2.06	0.48	2302
	22	18	7.82	5.01	0.64	1558	7.75	4.96	0.64	1572	7.66	4.90	0.64	1587	7.56	4.84	0.64	1600	7.49	4.79	0.64	1608	7.41	4.74	0.64	1661	7.31	4.68	0.64	1734	7.18	4.59	0.64	1852	7.01	4.49	0.64	1937	6.80	4.35	0.64	2010	6.25	4.00	0.64	2135	5.15	3.30	0.64	2217	4.25	2.72	0.64	2301
	22	20	8.06	4.19	0.52	1582	7.98	4.15	0.52	1596	7.90	4.11	0.52	1610	7.80	4.05	0.52	1623	7.72	4.01	0.52	1631	7.63	3.97	0.52	1685	7.53	3.92	0.52	1758	7.40	3.85	0.52	1875	7.22	3.76	0.52	1961	7.01	3.65	0.52	2034	6.44	3.35	0.52	2159	5.31	2.76	0.52	2240	4.38	2.28	0.52	2325
	22	22	8.20	3.28	0.40	1598	8.12	3.25	0.40	1612	8.03	3.21	0.40	1627	7.93	3.17	0.40	1640	7.85	3.14	0.40	1648	7.76	3.11	0.40	1701	7.66	3.06	0.40	1774	7.52	3.01	0.40	1892	7.35	2.94	0.40	1977	7.13	2.85	0.40	2050	6.55	2.62	0.40	2175	5.40	2.16	0.40	2257	4.46	1.78	0.40	2341
	23	18	7.98	5.43	0.68	1574	7.90	5.38	0.68	1588	7.82	5.32	0.68	1603	7.72	5.25	0.68	1616	7.64	5.20	0.68	1624	7.56	5.14	0.68	1678	7.45	5.07	0.68	1752	7.32	4.98	0.68	1870	7.15	4.86	0.68	1957	6.94	4.72	0.68	2030	6.37	4.33	0.68	2157	5.26	3.58	0.68	2239	4.34	2.95	0.68	2325
	23	20	8.23	4.61	0.56	1598	8.15	4.56	0.56	1612	8.06	4.51	0.56	1627	7.95	4.45	0.56	1640	7.88	4.41	0.56	1648	7.79	4.36	0.56	1702	7.68	4.30	0.56	1776	7.55	4.23	0.56	1894	7.37	4.13	0.56	1981	7.16	4.01	0.56	2054	6.57	3.68	0.56	2181	5.42	3.03	0.56	2263	4.47	2.50	0.56	2349
	23	22	8.37	3.68	0.44	1614	8.29	3.65	0.44	1629	8.20	3.61	0.44	1643	8.09	3.56	0.44	1656	8.01	3.52	0.44	1664	7.92	3.49	0.44	1718	7.81	3.44	0.44	1792	7.68	3.38	0.44	1911	7.50	3.30	0.44	1997	7.28	3.20	0.44	2071	6.68	2.94	0.44	2197	5.51	2.42	0.44	2279	4.55	2.00	0.44	2365
	24	18	8.15	5.87	0.72	1590	8.07	5.81	0.72	1604	7.98	5.74	0.72	1619	7.88	5.67	0.72	1632	7.80	5.61	0.72	1640	7.71	5.55	0.72	1695	7.61	5.48	0.72	1770	7.47	5.38	0.72	1889	7.30	5.25	0.72	1977	7.08	5.10	0.72	2051	6.50	4.68	0.72	2179	5.37	3.86	0.72	2262	4.43	3.19	0.72	2348
	24	20	8.40	5.04	0.60	1614	8.31	4.99	0.60	1629	8.22	4.93	0.60	1643	8.12	4.87	0.60	1656	8.04	4.82	0.60	1665	7.95	4.77	0.60	1719	7.84	4.70	0.60	1794	7.70	4.62	0.60	1913	7.52	4.51	0.60	2001	7.30	4.38	0.60	2075	6.70	4.02	0.60	2203	5.53	3.32	0.60	2286	4.56	2.74	0.60	2372
	24	22	8.54	4.10	0.48	1630	8.45	4.06	0.48	1645	8.36	4.01	0.48	1660	8.26	3.96	0.48	1673	8.17	3.92	0.48	1681	8.08	3.88	0.48	1736	7.97	3.83	0.48	1810	7.83	3.76	0.48	1930	7.65	3.67	0.48	2017	7.43	3.56	0.48	2092	6.82	3.27	0.48	2219	5.62	2.70	0.48	2302	4.64	2.23	0.48	2389
	24	24	8.66	3.12	0.36	1650	8.57	3.09	0.36	1664	8.48	3.05	0.36	1679	8.37	3.01	0.36	1692	8.29	2.98	0.36	1700	8.20	2.95	0.36	1755	8.08	2.91	0.36	1830	7.94	2.86	0.36	1949	7.76	2.79	0.36	2037	7.53	2.71	0.36	2111	6.91	2.49	0.36	2239	5.70	2.05	0.36	2322	4.70	1.69	0.36	2408
	25	18	8.40	6.38	0.76	1606	8.32	6.32	0.76	1620	8.23	6.25	0.76	1635	8.12	6.17	0.76	1649	8.04	6.11	0.76	1657	7.95	6.04	0.76	1712	7.84	5.96	0.76	1787	7.70	5.85	0.76	1908	7.52	5.72	0.76	1997	7.30	5.55	0.76	2071	6.70	5.10	0.76	2201	5.53	4.20	0.76	2285	4.56	3.47	0.76	2372
	25	20	8.66	5.54	0.64	1630	8.57	5.48	0.64	1645	8.48	5.43	0.64	1660	8.37	5.36	0.64	1673	8.29	5.30	0.64	1681	8.20	5.24	0.64	1736	8.08	5.17	0.64	1812	7.94	5.08	0.64	1933	7.75	4.96	0.64	2021	7.53	4.82	0.64	2096	6.91	4.42	0.64	2225	5.70	3.65	0.64	2309	4.70	3.01	0.64	2396
	25	22	8.80	4.58	0.52	1647	8.72	4.53	0.52	1662	8.62	4.48	0.52	1676	8.51	4.43	0.52	1690	8.43	4.38	0.52	1698	8.33	4.33	0.52	1753	8.22	4.27	0.52	1829	8.07	4.20	0.52	1949	7.88	4.10	0.52	2038	7.66	3.98	0.52	2113	7.03	3.65	0.52	2242	5.80	3.01	0.52	2326	4.78	2.49	0.52	2413
	25	24	8.93	3.57	0.40	1667	8.84	3.54	0.40	1681	8.74	3.50	0.40	1696	8.63	3.45	0.40	1709	8.54	3.42	0.40	1718	8.45	3.38	0.40	1773	8.33	3.33	0.40	1848	8.19	3.27	0.40	1969	8.00	3.20	0.40	2057	7.76	3.10	0.40	2132	7.13	2.85	0.40	2261	5.88	2.35	0.40	2345	4.85	1.94	0.40	2432
	26	18	8.66	6.93	0.80	1622	8.57	6.86	0.80	1637	8.48	6.78	0.80	1652	8.37	6.70	0.80	1665	8.29	6.63	0.80	1674	8.20	6.56	0.80	1729	8.08	6.47	0.80	1805	7.94	6.35	0.80	1928	7.76	6.20	0.80	2017	7.53	6.02	0.80	2092	6.91	5.53	0.80	2223	5.70	4.56	0.80	2308	4.70	3.76	0.80	2396
	26	20	8.92	6.07	0.68	1647	8.84	6.01	0.68	1662	8.74	5.94	0.68	1677	8.63	5.87	0.68	1690	8.54	5.81	0.68	1698	8.45	5.75	0.68	1754	8.33	5.67	0.68	1830	8.18	5.57	0.68	1952	7.99	5.44	0.68	2041	7.76	5.28	0.68	2117	7.12	4.84	0.68	2248	5.88	4.00	0.68	2332	4.85	3.30	0.68	2420
	26	22	9.08	5.08	0.56	1664	8.99	5.03	0.56	1678	8.89	4.98	0.56	1693	8.77	4.91	0.56	1707	8.69	4.86	0.56	1715	8.59	4.81	0.56	1771	8.47	4.75	0.56	1847	8.32	4.66	0.56	1969	8.13	4.55	0.56	2058	7.89	4.42	0.56	2134	7.24	4.06	0.56	2264	5.98	3.35	0.56	2349	4.93	2.76	0.56	2437
	26	24	9.20	4.05	0.44	1683	9.11	4.01	0.44	1698	9.01	3.97	0.44	1713	8.90	3.91	0.44	1727	8.81	3.88	0.44	1735	8.71	3.83	0.44	1791	8.59	3.78	0.44	1867	8.44	3.71	0.44	1989	8.24	3.63	0.44	2078	8.00	3.52	0.44	2154	7.35	3.23	0.44	2284	6.06	2.67	0.44	2369	5.00	2.20	0.44	2457
	26	26	9.35	2.99	0.32	1706	9.26	2.96	0.32	1721	9.16	2.93	0.32	1736	9.04	2.89	0.32	1749	8.95	2.86	0.32	1758	8.85	2.83	0.32	1813	8.73	2.79	0.32	1890	8.58	2.74	0.32	2012	8.37	2.68	0.32	2101	8.13	2.60	0.32	2177	7.46	2.39	0.32	2307	6.16	1.97	0.32	2392	5.08	1.63	0.32	2480
	27	18	8.84	7.42	0.84	1638	8.75	7.35	0.84	1653	8.65	7.27	0.84	1668	8.54	7.17	0.84	1682	8.46	7.10	0.84	1691	8.36	7.03	0.84	1747	8.25	6.93	0.84	1824	8.10	6.81	0.84	1947	7.91	6.65	0.84	2037	7.68	6.45	0.84	2114	7.05	5.92	0.84	2245	5.82	4.89	0.84	2331	4.80	4.03	0.84	2420
	27	19	9.02	7.03	0.78	1648	8.93	6.96	0.78	1663	8.83	6.89	0.78	1678	8.72	6.80	0.78	1692	8.63	6.73	0.78	1701	8.54	6.66	0.78	1757	8.42	6.57	0.78	1834	8.27	6.45	0.78	1957	8.08	6.30	0.78	2047	7.84	6.12	0.78	2124	7.20	5.61	0.78	2255	5.94	4.63	0.78	2341	4.90	3.82	0.78	2430
	27	20	9.11	6.56	0.72	1663	9.02	6.49	0.72	1678	8.92	6.42	0.72	1693	8.80	6.34	0.72	1707	8.72	6.28	0.72	1716	8.62	6.21	0.72	1772	8.50	6.12	0.72	1849	8.35	6.01	0.72	1972	8.16	5.87	0.72	2062	7.92	5.70	0.72	2139	7.27	5.23	0.72	2270	6.00	4.32	0.72	2356	4.95	3.56	0.72	2445
	27	22	9.26	5.56	0.60	1680	9.17	5.50	0.60	1695	9.07	5.44	0.60	1710	8.95	5.37	0.60	1724	8.86	5.32	0.60	1733	8.77	5.26	0.60	1789	8.65	5.19	0.60	1866	8.49	5.10	0.60	1989	8.29	4.98	0.60	2079	8.05	4.83	0.60	2156	7.39	4.44	0.60	2287	6.10	3.66	0.60	2373	5.03	3.02	0.60	2462
	27	24	9.39	4.51	0.48	1700	9.30	4.46	0.48	1715	9.20	4.41	0.48	1730	9.08	4.36	0.48	1744	8.99	4.31	0.48	1753	8.89	4.27	0.48	1809	8.77	4.21	0.48	1886	8.61	4.13	0.48	2009	8.41	4.04	0.48	2099	8.17	3.92	0.48	2176	7.50	3.60	0.48	2307	6.18	2.97	0.48	2393	5.10	2.45	0.48	2482
	27	26	9.54	3.43	0.36	1723	9.45	3.40	0.36	1738	9.34	3.36	0.36	1753	9.22	3.32	0.36	1767	9.13	3.29	0.36	1776	9.03	3.25	0.36	1832	8.91	3.21	0.36	1909	8.75	3.15	0.36	2032	8.55	3.08	0.36	2122	8.30	2.99	0.36	2199	7.62	2.74	0.36	2330	6.28	2.26	0.36	2416	5.18	1.87	0.36	2505
	28	18	8.92	7.85	0.88	1655	8.84	7.78	0.88	1670	8.74	7.69	0.88	1685	8.63	7.59	0.88	1699	8.54	7.52	0.88	1707	8.45	7.43	0.88	1764	8.33	7.33	0.88	1842	8.18	7.20	0.88	1967	7.99	7.03	0.88	2057	7.76	6.83	0.88	2135	7.12	6.27	0.88	2268	5.88	5.17	0.88	2354	4.85	4.27	0.88	2444
	28	20	9.11	6.92	0.76	1680	9.02	6.85	0.76	1695	8.92	6.78	0.76	1710	8.80	6.69	0.76	1724	8.72	6.62	0.76	1733	8.62	6.55	0.76	1789	8.50	6.46	0.76	1867	8.35	6.35	0.76	1992	8.16	6.20	0.76	2083	7.92	6.02	0.76	2160	7.27	5.52	0.76	2293	6.00	4.56	0.76	2379	4.95	3.76	0.76	2469
	28	22	9.20	5.89	0.64	1697	9.11	5.83	0.64	1712	9.01	5.76	0.64	1728	8.89	5.69	0.64	1741	8.80	5.63	0.64	1750	8.71	5.57	0.64	1807	8.59	5.50	0.64	1884	8.44	5.40	0.64	2009	8.24	5.27	0.64	2100	8.00	5.12	0.64	2177	7.34	4.70	0.64	2310	6.06	3.88	0.64	2397	5.00	3.20	0.64	2486
	28	24	9.35	4.86	0.52	1717	9.26	4.82	0.52	1733	9.16	4.76	0.52	1748	9.04	4.70	0.52	1761	8.95	4.66	0.52	1770	8.86	4.60	0.52	1827	8.73	4.54	0.52	1905	8.58	4.46	0.52	2029	8.38	4.36	0.52	2120	8.13	4.23	0.52	2197	7.47	3.88	0.52	2330	6.16	3.20	0.52	2417	5.08	2.64	0.52	2507
	28	26	9.48	3.79	0.40	1741	9.39	3.76	0.40	1756	9.29	3.72	0.40	1771	9.17	3.67	0.40	1785	9.08	3.63	0.40	1793	8.98	3.59	0.40	1850	8.86	3.54	0.40	1928	8.70	3.48	0.40	2052	8.49	3.40	0.40	2143	8.25	3.30	0.40	2221	7.57	3.03	0.40	2354	6.25	2.50	0.40	2440	5.15	2.06	0.40	2530
	29	18	9.01	8.11	0.90	1671	8.92	8.03	0.90	1687	8.83	7.94	0.90	1702	8.71	7.84	0.90	1716	8.63	7.76	0.90	1724	8.53	7.68	0.90	1782	8.42	7.57	0.90	1860	8.27	7.44	0.90	1986	8.07	7.27	0.90	2078	7.84	7.05	0.90	2156	7.19	6.48	0.90	2290	5.94	5.34	0.90	2378	4.90	4.41	0.90	2469
	29	20	9.20	7.36	0.80	1697	9.11	7.28	0.80	1712	9.01	7.21	0.80	1728	8.89	7.11	0.80	1741	8.80	7.04	0.80	1750	8.71	6.97	0.80	1807	8.59	6.87	0.80	1886	8.44	6.75	0.80	2012	8.24	6.59	0.80	2104	8.00	6.40	0.80	2182	7.34	5.87	0.80	2316	6.06	4.85	0.80	2403	5.00	4.00	0.80	2494
	29	22	9.38	6.38	0.68	1714	9.29	6.32	0.68	1729	9.19	6.25	0.68	1745	9.07	6.17	0.68	1759	8.98	6.11	0.68	1767	8.88	6.04	0.68	1825	8.76	5.96	0.68	1903	8.60	5.85	0.68	2029	8.40	5.71	0.68	2121	8.16	5.55	0.68	2199	7.49	5.09	0.68	2333	6.18	4.20	0.68	2421	5.10	3.47	0.68	2511
	29	24	9.45	5.29	0.56	1735	9.35	5.24	0.56	1750	9.25	5.18	0.56	1765	9.13	5.11	0.56	1779	9.04	5.06	0.56	1788	8.94	5.01	0.56	1845	8.82	4.94	0.56	1924	8.66	4.85	0.56	2049	8.46	4.74	0.56	2141	8.21	4.60	0.56	2219	7.54	4.22	0.56	2354	6.22	3.48	0.56	2441	5.13	2.87	0.56	2532
	29	26	9.58	4.21	0.44	1758	9.48	4.17	0.44	1773	9.38	4.13	0.44	1789	9.26	4.07	0.44	1803	9.17	4.03	0.44	1811	9.07	3.99	0.44	1869	8.94	3.94	0.44	1947	8.79	3.87	0.44	2073	8.58	3.78	0.44	2165	8.33	3.67	0.44	2243	7.65	3.36	0.44	2377	6.31	2.78	0.44	2464	5.20	2.29	0.44	2555
	30	18	9.10	8.19	0.90	1688	9.01	8.11	0.90	1703	8.91	8.02	0.90	1719	8.80	7.92	0.90	1733	8.71	7.84	0.90	1742	8.62	7.76	0.90	1800	8.50	7.65	0.90	1879	8.35	7.51	0.90	2006	8.15	7.34	0.90	2099	7.92	7.12	0.90	2178	7.27	6.54	0.90	2313	6.00	5.40	0.90	2402	4.95	4.45	0.90	2493
	30	20	9.29	7.80	0.84	1714	9.20	7.73	0.84	1729	9.10	7.64	0.84	1745	8.98	7.54	0.84	1759	8.89	7.47	0.84	1767	8.79	7.39	0.84	1825	8.67	7.29	0.84	1905	8.52	7.16	0.84	2032	8.32	6.99	0.84	2125	8.08	6.79	0.84	2203	7.42	6.23	0.84	2339	6.12	5.14	0.84	2427	5.05	4.24	0.84	2519
	30	22	9.47	6.82	0.72	1731	9.38	6.75	0.72	1747	9.28	6.68	0.72	1762	9.16	6.59	0.72	1776	9.07	6.53	0.72	1785	8.97	6.46	0.72	1843	8.85	6.37	0.72	1922	8.69	6.26	0.72	2049	8.49	6.11	0.72	2142	8.24	5.93	0.72	2221	7.56	5.45	0.72	2357	6.24	4.49	0.72	2445	5.15	3.71	0.72	2536
	30	24	9.54	5.72	0.60	1752	9.45	5.67	0.60	1767	9.34	5.61	0.60	1783	9.22	5.53	0.60	1797	9.13	5.48	0.60	1806	9.03	5.42	0.60	1864	8.91	5.35	0.60	1943	8.75	5.25	0.60	2070	8.55	5.13	0.60	2163	8.30	4.98	0.60	2241	7.62	4.57	0.60	2377	6.28	3.77	0.60	2465	5.18	3.11	0.60	2557
	30	26	9.67	4.64	0.48	1776	9.58	4.60	0.48	1791	9.47	4.55	0.48	1807	9.35	4.49	0.48	1821	9.26	4.45	0.48	1829	9.16	4.40	0.48	1887	9.03	4.34	0.48	1967	8.87	4.26	0.48	2094	8.67	4.16	0.48	2186	8.41	4.04	0.48	2265	7.72	3.71	0.48	2401	6.37	3.06	0.48	2489	5.26	2.52	0.48	2581
	31	18	9.19	8.27	0.90	1705	9.10	8.19	0.90	1720	9.00	8.10	0.90	1736	8.89	8.00	0.90	1750	8.80	7.92	0.90	1759	8.70	7.83	0.90	1818	8.58	7.73	0.90	1898	8.43	7.59	0.90	2026	8.24	7.41	0.90	2120	8.00	7.20	0.90	2199	7.34	6.61	0.90	2336	6.06	5.45	0.90	2426	5.00	4.50	0.90	2518
	31	20	9.38	8.26	0.88	1731	9.29	8.17	0.88	1747	9.19	8.09	0.88	1762	9.07	7.98	0.88	1776	8.98	7.90	0.88	1785	8.88	7.82	0.88	1844	8.76	7.71	0.88	1924	8.60	7.57	0.88	2052	8.40	7.39	0.88	2146	8.16	7.18	0.88	2225	7.49	6.59	0.88	2362	6.18	5.44	0.88	2452	5.10	4.49	0.88	2544
	31	22	9.57	7.27	0.76	1749	9.47	7.20	0.76	1764	9.37	7.12	0.76	1780	9.25	7.03	0.76	1794	9.16	6.96	0.76	1803	9.06	6.89	0.76	1861	8.93	6.79	0.76	1941	8.78	6.67	0.76	2070	8.57	6.51	0.76	2164	8.32	6.32	0.76	2243	7.64	5.81	0.76	2380	6.30	4.79	0.76	2469	5.20	3.95	0.76	2562
	31	24	9.64	6.17	0.64	1769	9.54	6.11	0.64	1785	9.44	6.04	0.64	1801	9.32	5.96	0.64	1815	9.22	5.90	0.64	1824	9.12	5.84	0.64	1882	9.00	5.76	0.64	1962	8.84	5.66	0.64	2091	8.63	5.52	0.64	2184	8.38	5.36	0.64	2264	7.69	4.92	0.64	2401	6.35	4.06	0.64	2490	5.24	3.35	0.64	2583
	31	26	9.77	5.08	0.52	1793	9.67	5.03	0.52	1809	9.57	4.98	0.52	1825	9.45	4.91	0.52	1839	9.35	4.86	0.52	1848	9.25	4.81	0.52	1906	9.12	4.74	0.52	1986	8.96	4.66	0.52	2115	8.75	4.55	0.52	2208	8.50	4.42	0.52	2288	7.80	4.06	0.52	2425	6.44	3.35	0.52	2514	5.31	2.76	0.52	2607
	32	18	9.29	8.36	0.90	1722	9.19	8.27	0.90	1738	9.09	8.18	0.90	1754	8.98	8.08	0.90	1768	8.89	8.00	0.90	1777	8.79	7.91	0.90	1836	8.67	7.80	0.90	1917	8.52	7.67	0.90	2046	8.32	7.49	0.90	2141	8.08	7.27	0.90	2221	7.41	6.67	0.90	2360	6.12	5.50	0.90	2450	5.05	4.54	0.90	2543
	32	20	9.48	8.53	0.90	1748	9.38	8.44	0.90	1764	9.28	8.35	0.90	1780	9.16	8.24	0.90	1794	9.07	8.16	0.90	1803	8.97	8.07	0.90	1862	8.85	7.96	0.90	1943	8.69	7.82	0.90	2073	8.49	7.64	0.90	2167	8.24	7.42	0.90	2248	7.56	6.81	0.90	2386	6.24	5.62	0.90	2476	5.15	4.63	0.90	2570
	32	22	9.66	7.73	0.80	1766	9.57	7.66	0.80	1782	9.47	7.57	0.80	1798	9.34	7.47	0.80	1812	9.25	7.40	0.80	1821	9.15	7.32	0.80	1880	9.02	7.22	0.80	1961	8.86	7.09	0.80	2090	8.66	6.93	0.80	2185	8.40	6.72	0.80	2266	7.72	6.17	0.80	2

4. CAPACITIES AND SELECTION DATA

| | | | Cooling Operation PERFORMANCE DATA | | |

27K (Up to 4 IDUs)

HEATING PERFORMANCE DATA

COMBINATION (%)	INDOOR DB(℃)	OUTDOOR WB(℃)									
		0		5		10		15		20	
		Q	INPUT	Q	INPUT	Q	INPUT	Q	INPUT	Q	INPUT
130%	15	9.35	2183	10.16	2298	10.97	2412	11.52	2485	11.86	2535
	16	9.23	2200	10.04	2316	10.84	2432	11.38	2505	11.72	2555
	17	9.12	2218	9.92	2335	10.71	2452	11.25	2525	11.58	2576
	18	9.02	2236	9.80	2354	10.58	2471	11.11	2545	11.45	2596
	19	8.91	2254	9.68	2373	10.46	2491	10.98	2566	11.31	2617
	20	8.82	2272	9.59	2392	10.36	2511	10.87	2587	11.20	2638
	21	8.72	2297	9.47	2418	10.23	2539	10.74	2615	11.07	2667
	22	8.61	2322	9.36	2445	10.11	2567	10.61	2644	10.93	2697
	23	8.51	2348	9.25	2472	9.99	2595	10.49	2673	10.80	2726
	24	8.41	2374	9.14	2499	9.87	2624	10.36	2702	10.67	2756
	25	8.30	2400	9.03	2526	9.75	2653	10.24	2732	10.54	2787
	26	8.21	2426	8.92	2554	9.63	2682	10.11	2762	10.42	2817
	27	8.11	2453	8.81	2582	9.52	2711	9.99	2793	10.29	2848
	28	8.01	2480	8.71	2610	9.40	2741	9.87	2823	10.17	2880
	29	7.91	2507	8.60	2639	9.29	2771	9.75	2854	10.05	2911
	30	7.82	2535	8.50	2668	9.18	2802	9.64	2886	9.93	2943

COMBINATION (%)	INDOOR DB(℃)	OUTDOOR WB(℃)									
		0		5		10		15		20	
		Q	INPUT	Q	INPUT	Q	INPUT	Q	INPUT	Q	INPUT
120%	15	9.07	2079	9.86	2188	10.65	2298	11.18	2367	11.52	2414
	16	8.97	2096	9.75	2206	10.52	2316	11.05	2386	11.38	2433
	17	8.86	2112	9.63	2224	10.40	2335	10.92	2405	11.25	2453
	18	8.75	2129	9.52	2242	10.28	2354	10.79	2424	11.11	2473
	19	8.65	2147	9.40	2260	10.15	2373	10.66	2444	10.98	2493
	20	8.56	2164	9.31	2278	10.05	2392	10.56	2463	10.87	2513
	21	8.46	2188	9.20	2303	9.93	2418	10.43	2491	10.74	2540
	22	8.36	2212	9.09	2328	9.81	2445	10.31	2518	10.61	2568
	23	8.26	2236	8.98	2354	9.70	2472	10.18	2546	10.49	2597
	24	8.16	2261	8.87	2380	9.58	2499	10.06	2574	10.36	2625
	25	8.06	2286	8.76	2406	9.47	2526	9.94	2602	10.24	2654
	26	7.97	2311	8.66	2432	9.35	2554	9.82	2631	10.11	2683
	27	7.87	2336	8.56	2459	9.24	2582	9.70	2660	9.99	2713
	28	7.78	2362	8.45	2486	9.13	2610	9.58	2689	9.87	2743
	29	7.68	2388	8.35	2514	9.02	2639	9.47	2718	9.75	2773
	30	7.59	2414	8.25	2541	8.91	2668	9.36	2748	9.64	2803

COMBINATION (%)	INDOOR DB(℃)	OUTDOOR WB(℃)									
		0		5		10		15		20	
		Q	INPUT	Q	INPUT	Q	INPUT	Q	INPUT	Q	INPUT
110%	15	8.81	2038	9.57	2145	10.34	2253	10.86	2320	11.18	2367
	16	8.70	2054	9.46	2163	10.22	2271	10.73	2339	11.05	2386
	17	8.60	2071	9.35	2180	10.10	2289	10.60	2358	10.92	2405
	18	8.50	2088	9.24	2198	9.98	2307	10.48	2377	10.79	2424
	19	8.40	2105	9.13	2215	9.86	2326	10.35	2396	10.66	2444
	20	8.32	2122	9.04	2233	9.76	2345	10.25	2415	10.56	2463
	21	8.22	2145	8.93	2258	9.64	2371	10.13	2442	10.43	2491
	22	8.12	2168	8.82	2283	9.53	2397	10.00	2469	10.31	2518
	23	8.02	2192	8.72	2308	9.41	2423	9.88	2496	10.18	2546
	24	7.92	2216	8.61	2333	9.30	2450	9.77	2523	10.06	2574
	25	7.83	2241	8.51	2359	9.19	2477	9.65	2551	9.94	2602
	26	7.73	2265	8.41	2385	9.08	2504	9.53	2579	9.82	2631
	27	7.64	2290	8.31	2411	8.97	2531	9.42	2607	9.70	2660
	28	7.55	2316	8.21	2437	8.86	2559	9.31	2636	9.58	2689
	29	7.46	2341	8.11	2464	8.76	2587	9.19	2665	9.47	2718
	30	7.37	2367	8.01	2491	8.65	2616	9.08	2694	9.36	2748

4. CAPACITIES AND SELECTION DATA

COMBINATION (%)	INDOOR DB(℃)	OUTDOOR WB(℃) 0		5		10		15		20	
		Q	INPUT	Q	INPUT	Q	INPUT	Q	INPUT	Q	INPUT
100%	15	8.55	1979	9.30	2083	10.04	2187	10.54	2253	10.86	2298
	16	8.45	1995	9.19	2100	9.92	2205	10.42	2271	10.73	2316
	17	8.35	2011	9.08	2117	9.80	2222	10.29	2289	10.60	2335
	18	8.25	2027	8.97	2134	9.69	2240	10.17	2307	10.48	2354
	19	8.15	2043	8.86	2151	9.57	2258	10.05	2326	10.35	2373
	20	8.07	2060	8.78	2168	9.48	2277	9.95	2345	10.25	2392
	21	7.98	2082	8.67	2192	9.36	2302	9.83	2371	10.13	2418
	22	7.88	2105	8.57	2216	9.25	2327	9.71	2397	10.00	2445
	23	7.79	2128	8.46	2240	9.14	2352	9.60	2423	9.88	2472
	24	7.69	2152	8.36	2265	9.03	2378	9.48	2450	9.77	2499
	25	7.60	2176	8.26	2290	8.92	2405	9.37	2477	9.65	2526
	26	7.51	2199	8.16	2315	8.81	2431	9.26	2504	9.53	2554
	27	7.42	2224	8.06	2341	8.71	2458	9.14	2531	9.42	2582
	28	7.33	2248	7.97	2366	8.60	2485	9.03	2559	9.31	2610
	29	7.24	2273	7.87	2392	8.50	2512	8.93	2587	9.19	2639
	30	7.15	2298	7.78	2419	8.40	2540	8.82	2616	9.08	2668

COMBINATION (%)	INDOOR DB(℃)	OUTDOOR WB(℃) 0		5		10		15		20	
		Q	INPUT	Q	INPUT	Q	INPUT	Q	INPUT	Q	INPUT
90%	15	8.25	1943	8.97	2045	9.69	2148	10.17	2212	10.48	2256
	16	8.16	1959	8.86	2062	9.57	2165	10.05	2230	10.35	2274
	17	8.06	1974	8.76	2078	9.46	2182	9.93	2248	10.23	2293
	18	7.96	1990	8.66	2095	9.35	2200	9.81	2266	10.11	2311
	19	7.87	2006	8.55	2112	9.24	2218	9.70	2284	9.99	2330
	20	7.79	2023	8.47	2129	9.15	2236	9.60	2303	9.89	2349
	21	7.70	2045	8.37	2153	9.04	2260	9.49	2328	9.77	2375
	22	7.60	2067	8.27	2176	8.93	2285	9.37	2354	9.65	2401
	23	7.51	2090	8.17	2200	8.82	2310	9.26	2379	9.54	2427
	24	7.42	2113	8.07	2224	8.71	2336	9.15	2406	9.42	2454
	25	7.33	2136	7.97	2249	8.61	2361	9.04	2432	9.31	2481
	26	7.25	2160	7.88	2274	8.51	2387	8.93	2459	9.20	2508
	27	7.16	2184	7.78	2299	8.40	2413	8.82	2486	9.09	2536
	28	7.07	2208	7.69	2324	8.30	2440	8.72	2513	8.98	2564
	29	6.99	2232	7.60	2349	8.20	2467	8.61	2541	8.87	2592
	30	6.90	2256	7.50	2375	8.11	2494	8.51	2569	8.77	2620

COMBINATION (%)	INDOOR DB(℃)	OUTDOOR WB(℃) 15	20	-15	-10	-5	0	5	10	15	20
		Q	INPUT	Q	INPUT	Q	INPUT	Q	INPUT	Q	INPUT
80%	15	8.01	1924	8.70	2025	9.40	2126	9.87	2190	10.16	2234
	16	7.91	1939	8.60	2041	9.29	2143	9.75	2208	10.04	2252
	17	7.82	1955	8.50	2058	9.18	2161	9.63	2225	9.92	2270
	18	7.72	1971	8.40	2074	9.07	2178	9.52	2243	9.81	2288
	19	7.63	1986	8.30	2091	8.96	2196	9.41	2261	9.69	2307
	20	7.56	2002	8.21	2108	8.87	2213	9.31	2280	9.59	2325
	21	7.47	2024	8.12	2131	8.76	2238	9.20	2305	9.48	2351
	22	7.38	2047	8.02	2154	8.66	2262	9.09	2330	9.37	2377
	23	7.29	2069	7.92	2178	8.56	2287	8.98	2356	9.25	2403
	24	7.20	2092	7.83	2202	8.45	2312	8.88	2382	9.14	2429
	25	7.11	2115	7.73	2226	8.35	2338	8.77	2408	9.03	2456
	26	7.03	2138	7.64	2251	8.25	2363	8.66	2434	8.92	2483
	27	6.94	2162	7.55	2276	8.15	2389	8.56	2461	8.82	2510
	28	6.86	2186	7.46	2301	8.05	2416	8.46	2488	8.71	2538
	29	6.78	2210	7.37	2326	7.96	2442	8.36	2515	8.61	2566
	30	6.70	2234	7.28	2351	7.86	2469	8.26	2543	8.50	2594

Remarks:
Q: Total Cooling Capacity (Gross) **kW**
INPUT: Power Input (including the compressor, evap. fan motor & cond. **W**
DB: Dry Bulb Temperature
WB: Wet Bulb Temperature

36K (Up to 5 IDUs)

| | | | Cooling Operation PERFORMANCE DATA | | |

4. CAPACITIES AND SELECTION DATA

| | | | Cooling Operation PERFORMANCE DATA | | |

| | | | Cooling Operation PERFORMANCE DATA | | |

4. CAPACITIES AND SELECTION DATA

Cooling Operation PERFORMANCE DATA

OUTDOOR DB (°C)

COMBINATION (%)	IDDB (°C)	ID WB (°C)	-15				-7				0				10				15				21				25				27				30				35				40				45				50			
			Q	SHC	SHF	IPT	Q	SHC	SHF	IPT	Q	SHC	SHF	IPT	Q	SHC	SHF	IPT	Q	SHC	SHF	IPT	Q	SHC	SHF	IPT	Q	SHC	SHF	IPT	Q	SHC	SHF	IPT	Q	SHC	SHF	IPT	Q	SHC	SHF	IPT	Q	SHC	SHF	IPT	Q	SHC	SHF	IPT	Q	SHC	SHF	IPT
100%	21	18	9.68	5.81	0.60	1891	9.58	5.75	0.60	1908	9.48	5.69	0.60	1925	9.36	5.62	0.60	1941	9.27	5.56	0.60	1951	9.17	5.50	0.60	2016	9.04	5.42	0.60	2104	8.88	5.33	0.60	2246	8.67	5.20	0.60	2350	8.42	5.05	0.60	2438	7.73	4.64	0.60	2590	6.38	3.83	0.60	2689	5.26	3.16	0.60	2792
	21	20	10.08	4.84	0.48	1914	9.98	4.79	0.48	1932	9.87	4.74	0.48	1949	9.74	4.68	0.48	1965	9.65	4.63	0.48	1974	9.54	4.58	0.48	2039	9.41	4.52	0.48	2128	9.24	4.44	0.48	2270	9.03	4.33	0.48	2374	8.77	4.21	0.48	2462	8.05	3.86	0.48	2614	6.64	3.19	0.48	2713	5.48	2.63	0.48	2815
	22	18	9.98	6.39	0.64	1910	9.88	6.32	0.64	1927	9.77	6.26	0.64	1945	9.65	6.17	0.64	1961	9.55	6.11	0.64	1970	9.45	6.05	0.64	2036	9.32	5.96	0.64	2126	9.15	5.86	0.64	2269	8.94	5.72	0.64	2374	8.68	5.55	0.64	2463	7.97	5.10	0.64	2616	6.57	4.21	0.64	2716	5.42	3.47	0.64	2820
	22	20	10.29	5.35	0.52	1934	10.18	5.30	0.52	1951	10.07	5.24	0.52	1969	9.94	5.17	0.52	1984	9.85	5.12	0.52	1994	9.74	5.06	0.52	2060	9.60	4.99	0.52	2149	9.43	4.91	0.52	2293	9.21	4.79	0.52	2398	8.94	4.65	0.52	2487	8.21	4.27	0.52	2640	6.77	3.52	0.52	2740	5.59	2.91	0.52	2843
	22	22	10.46	4.18	0.40	1950	10.36	4.14	0.40	1967	10.24	4.10	0.40	1985	10.11	4.05	0.40	2001	10.01	4.00	0.40	2010	9.90	3.96	0.40	2076	9.77	3.91	0.40	2166	9.59	3.84	0.40	2309	9.37	3.75	0.40	2414	9.10	3.64	0.40	2503	8.35	3.34	0.40	2656	6.89	2.76	0.40	2756	5.68	2.27	0.40	2860
	23	18	10.18	6.92	0.68	1929	10.08	6.86	0.68	1947	9.97	6.78	0.68	1964	9.85	6.69	0.68	1980	9.75	6.63	0.68	1990	9.64	6.56	0.68	2057	9.51	6.47	0.68	2147	9.34	6.35	0.68	2292	9.12	6.20	0.68	2398	8.86	6.02	0.68	2488	8.13	5.53	0.68	2643	6.71	4.56	0.68	2744	5.53	3.76	0.68	2848
	23	20	10.50	5.88	0.56	1953	10.39	5.82	0.56	1971	10.28	5.76	0.56	1988	10.15	5.68	0.56	2004	10.05	5.63	0.56	2014	9.94	5.56	0.56	2081	9.80	5.49	0.56	2171	9.63	5.39	0.56	2316	9.40	5.26	0.56	2422	9.13	5.11	0.56	2512	8.38	4.69	0.56	2667	6.91	3.87	0.56	2768	5.70	3.19	0.56	2872
	23	22	10.67	4.70	0.44	1969	10.57	4.65	0.44	1987	10.45	4.60	0.44	2005	10.32	4.54	0.44	2021	10.22	4.50	0.44	2031	10.11	4.45	0.44	2097	9.97	4.39	0.44	2187	9.79	4.31	0.44	2332	9.56	4.21	0.44	2438	9.28	4.08	0.44	2528	8.52	3.75	0.44	2683	7.03	3.09	0.44	2784	5.80	2.55	0.44	2889
	24	18	10.39	7.48	0.72	1949	10.29	7.41	0.72	1966	10.18	7.33	0.72	1984	10.05	7.23	0.72	2000	9.95	7.16	0.72	2010	9.84	7.08	0.72	2077	9.70	6.99	0.72	2169	9.53	6.86	0.72	2315	9.31	6.70	0.72	2422	9.04	6.51	0.72	2513	8.30	5.97	0.72	2669	6.84	4.93	0.72	2771	5.65	4.07	0.72	2877
	24	20	10.71	6.43	0.60	1973	10.60	6.36	0.60	1991	10.49	6.29	0.60	2009	10.35	6.21	0.60	2025	10.25	6.15	0.60	2035	10.14	6.08	0.60	2102	10.00	6.00	0.60	2193	9.82	5.89	0.60	2340	9.59	5.76	0.60	2447	9.31	5.59	0.60	2537	8.55	5.13	0.60	2694	7.05	4.23	0.60	2796	5.82	3.49	0.60	2901
	24	22	10.89	5.23	0.48	1989	10.78	5.18	0.48	2007	10.67	5.12	0.48	2025	10.53	5.05	0.48	2041	10.43	5.00	0.48	2051	10.31	4.95	0.48	2118	10.17	4.88	0.48	2210	9.99	4.80	0.48	2356	9.76	4.68	0.48	2463	9.47	4.55	0.48	2554	8.69	4.17	0.48	2710	7.17	3.44	0.48	2812	5.92	2.84	0.48	2918
	24	24	11.04	3.98	0.36	2009	10.93	3.94	0.36	2027	10.82	3.89	0.36	2044	10.68	3.84	0.36	2061	10.57	3.81	0.36	2071	10.46	3.76	0.36	2137	10.31	3.71	0.36	2229	10.13	3.65	0.36	2375	9.89	3.56	0.36	2482	9.60	3.46	0.36	2573	8.82	3.17	0.36	2730	7.27	2.62	0.36	2831	6.00	2.16	0.36	2937
	25	18	10.71	8.14	0.76	1968	10.61	8.06	0.76	1986	10.49	7.97	0.76	2004	10.36	7.87	0.76	2021	10.25	7.79	0.76	2031	10.14	7.71	0.76	2098	10.00	7.60	0.76	2191	9.83	7.47	0.76	2339	9.60	7.29	0.76	2447	9.32	7.08	0.76	2538	8.55	6.50	0.76	2696	7.06	5.36	0.76	2799	5.82	4.42	0.76	2906
	25	20	11.04	7.07	0.64	1993	10.93	7.00	0.64	2011	10.81	6.92	0.64	2029	10.67	6.83	0.64	2045	10.57	6.76	0.64	2055	10.45	6.69	0.64	2123	10.31	6.60	0.64	2215	10.13	6.48	0.64	2363	9.89	6.33	0.64	2471	9.60	6.14	0.64	2563	8.81	5.64	0.64	2721	7.27	4.65	0.64	2824	6.00	3.84	0.64	2931
	25	22	11.23	5.84	0.52	2009	11.12	5.78	0.52	2027	11.00	5.72	0.52	2046	10.86	5.64	0.52	2062	10.75	5.59	0.52	2072	10.63	5.53	0.52	2139	10.48	5.45	0.52	2232	10.30	5.36	0.52	2380	10.06	5.23	0.52	2488	9.76	5.08	0.52	2580	8.96	4.66	0.52	2738	7.39	3.85	0.52	2840	6.10	3.17	0.52	2947
	25	24	11.39	4.55	0.40	2029	11.27	4.51	0.40	2047	11.15	4.46	0.40	2065	11.01	4.40	0.40	2081	10.90	4.36	0.40	2092	10.78	4.31	0.40	2159	10.63	4.25	0.40	2251	10.44	4.18	0.40	2399	10.20	4.08	0.40	2507	9.90	3.96	0.40	2599	9.09	3.64	0.40	2757	7.50	3.00	0.40	2860	6.19	2.47	0.40	2967
	26	18	11.04	8.84	0.80	1988	10.93	8.75	0.80	2006	10.82	8.65	0.80	2025	10.68	8.54	0.80	2041	10.57	8.46	0.80	2051	10.46	8.36	0.80	2119	10.31	8.25	0.80	2213	10.13	8.10	0.80	2362	9.89	7.91	0.80	2471	9.60	7.68	0.80	2564	8.82	7.05	0.80	2724	7.27	5.82	0.80	2828	6.00	4.80	0.80	2935
	26	20	11.38	7.74	0.68	2013	11.27	7.66	0.68	2031	11.15	7.58	0.68	2049	11.00	7.48	0.68	2066	10.89	7.41	0.68	2076	10.78	7.33	0.68	2144	10.63	7.23	0.68	2238	10.44	7.10	0.68	2387	10.19	6.93	0.68	2496	9.90	6.73	0.68	2589	9.09	6.18	0.68	2748	7.50	5.10	0.68	2852	6.18	4.21	0.68	2960
	26	22	11.58	6.48	0.56	2030	11.46	6.42	0.56	2048	11.34	6.35	0.56	2066	11.19	6.27	0.56	2083	11.08	6.20	0.56	2093	10.96	6.14	0.56	2161	10.81	6.05	0.56	2254	10.62	5.95	0.56	2404	10.37	5.81	0.56	2513	10.07	5.64	0.56	2606	9.24	5.17	0.56	2765	7.62	4.27	0.56	2869	6.29	3.52	0.56	2977
	26	24	11.74	5.16	0.44	2050	11.62	5.11	0.44	2068	11.50	5.06	0.44	2086	11.35	4.99	0.44	2102	11.24	4.94	0.44	2113	11.11	4.89	0.44	2181	10.96	4.82	0.44	2274	10.77	4.74	0.44	2424	10.51	4.63	0.44	2533	10.21	4.49	0.44	2625	9.37	4.12	0.44	2785	7.73	3.40	0.44	2889	6.38	2.81	0.44	2997
	26	26	11.93	3.82	0.32	2072	11.81	3.78	0.32	2090	11.68	3.74	0.32	2109	11.53	3.69	0.32	2125	11.41	3.65	0.32	2135	11.29	3.61	0.32	2204	11.13	3.56	0.32	2297	10.94	3.50	0.32	2446	10.68	3.42	0.32	2556	10.37	3.32	0.32	2648	9.52	3.05	0.32	2808	7.85	2.51	0.32	2912	6.48	2.07	0.32	3020
	27	18	11.27	9.47	0.84	2008	11.16	9.37	0.84	2027	11.04	9.27	0.84	2045	10.89	9.15	0.84	2062	10.79	9.06	0.84	2072	10.67	8.96	0.84	2141	10.52	8.84	0.84	2235	10.34	8.68	0.84	2386	10.09	8.48	0.84	2496	9.80	8.23	0.84	2590	9.00	7.56	0.84	2751	7.42	6.23	0.84	2856	6.12	5.14	0.84	2965
	27	19	11.50	8.97	0.78	2018	11.39	8.88	0.78	2037	11.26	8.78	0.78	2055	11.12	8.67	0.78	2072	11.01	8.59	0.78	2082	10.89	8.49	0.78	2151	10.74	8.37	0.78	2245	10.55	8.23	0.78	2396	10.30	8.03	0.78	2506	10.00	7.80	0.78	2600	9.18	7.16	0.78	2761	7.57	5.91	0.78	2866	6.25	4.87	0.78	2975
	27	20	11.61	8.36	0.72	2033	11.50	8.28	0.72	2052	11.37	8.19	0.72	2070	11.23	8.08	0.72	2087	11.12	8.00	0.72	2097	11.00	7.92	0.72	2166	10.84	7.81	0.72	2260	10.65	7.67	0.72	2411	10.40	7.49	0.72	2521	10.10	7.27	0.72	2615	9.27	6.68	0.72	2776	7.65	5.51	0.72	2881	6.31	4.54	0.72	2990
	27	22	11.81	7.09	0.60	2050	11.69	7.02	0.60	2069	11.57	6.94	0.60	2087	11.42	6.85	0.60	2104	11.31	6.78	0.60	2114	11.18	6.71	0.60	2183	11.03	6.62	0.60	2277	10.83	6.50	0.60	2428	10.58	6.35	0.60	2538	10.27	6.16	0.60	2632	9.43	5.66	0.60	2793	7.78	4.67	0.60	2898	6.42	3.85	0.60	3007
	27	24	11.98	5.75	0.48	2070	11.86	5.69	0.48	2089	11.73	5.63	0.48	2107	11.58	5.56	0.48	2124	11.46	5.50	0.48	2134	11.34	5.44	0.48	2203	11.18	5.37	0.48	2297	10.99	5.27	0.48	2448	10.73	5.15	0.48	2558	10.42	5.00	0.48	2652	9.56	4.59	0.48	2813	7.89	3.79	0.48	2918	6.51	3.12	0.48	3027
	27	26	12.17	4.38	0.36	2093	12.05	4.34	0.36	2112	11.92	4.29	0.36	2130	11.76	4.24	0.36	2147	11.65	4.19	0.36	2157	11.52	4.15	0.36	2226	11.36	4.09	0.36	2320	11.16	4.02	0.36	2471	10.90	3.92	0.36	2581	10.58	3.81	0.36	2675	9.71	3.50	0.36	2836	8.01	2.89	0.36	2941	6.61	2.38	0.36	3050
	28	18	11.38	10.02	0.88	2028	11.27	9.92	0.88	2047	11.15	9.81	0.88	2066	11.00	9.68	0.88	2082	10.89	9.59	0.88	2093	10.78	9.48	0.88	2162	10.63	9.35	0.88	2258	10.44	9.19	0.88	2410	10.19	8.97	0.88	2521	9.90	8.71	0.88	2616	9.09	8.00	0.88	2779	7.50	6.60	0.88	2885	6.18	5.44	0.88	2995
	28	20	11.61	8.83	0.76	2054	11.50	8.74	0.76	2072	11.37	8.64	0.76	2091	11.23	8.53	0.76	2107	11.12	8.45	0.76	2118	11.00	8.36	0.76	2188	10.84	8.24	0.76	2283	10.65	8.10	0.76	2435	10.40	7.91	0.76	2547	10.10	7.68	0.76	2641	9.27	7.05	0.76	2804	7.65	5.81	0.76	2910	6.31	4.80	0.76	3020
	28	22	11.73	7.51	0.64	2071	11.61	7.43	0.64	2089	11.49	7.35	0.64	2108	11.34	7.26	0.64	2125	11.23	7.19	0.64	2135	11.11	7.11	0.64	2205	10.95	7.01	0.64	2300	10.76	6.89	0.64	2452	10.51	6.72	0.64	2564	10.20	6.53	0.64	2658	9.36	5.99	0.64	2821	7.73	4.94	0.64	2927	6.37	4.08	0.64	3037
	28	24	11.93	6.20	0.52	2091	11.81	6.14	0.52	2109	11.68	6.08	0.52	2128	11.53	6.00	0.52	2145	11.42	5.94	0.52	2155	11.30	5.87	0.52	2225	11.14	5.79	0.52	2320	10.94	5.69	0.52	2473	10.69	5.56	0.52	2584	10.37	5.39	0.52	2679	9.52	4.95	0.52	2841	7.86	4.09	0.52	2947	6.48	3.37	0.52	3057
	28	26	12.10	4.84	0.40	2114	11.98	4.79	0.40	2133	11.85	4.74	0.40	2151	11.69	4.68	0.40	2168	11.58	4.63	0.40	2179	11.45	4.58	0.40	2248	11.30	4.52	0.40	2343	11.10	4.44	0.40	2496	10.84	4.33	0.40	2607	10.52	4.21	0.40	2702	9.66	3.86	0.40	2865	7.97	3.19	0.40	2971	6.57	2.63	0.40	3081
	29	18	11.50	10.35	0.90	2049	11.38	10.24	0.90	2067	11.26	10.13	0.90	2086	11.11	10.00	0.90	2103	11.00	9.90	0.90	2114	10.88	9.80	0.90	2184	10.73	9.66	0.90	2280	10.54	9.49	0.90	2434	10.30	9.27	0.90	2547	10.00	9.00	0.90	2642	9.18	8.26	0.90	2806	7.57	6.81	0.90	2914	6.25	5.62	0.90	3025
	29	20	11.73	9.38	0.80	2074	11.61	9.29	0.80	2093	11.49	9.19	0.80	2112	11.34	9.07	0.80	2129	11.23	8.98	0.80	2139	11.11	8.88	0.80	2209	10.95	8.76	0.80	2306	10.76	8.61	0.80	2460	10.51	8.41	0.80	2572	10.20	8.16	0.80	2668	9.36	7.49	0.80	2832	7.73	6.18	0.80	2939	6.37	5.10	0.80	3050
	29	22	11.97	8.14	0.68	2091	11.85	8.06	0.68	2110	11.72	7.97	0.68	2129	11.57	7.87	0.68	2146	11.45	7.79	0.68	2157	11.33	7.70	0.68	2227	11.17	7.60	0.68	2323	10.97	7.46	0.68	2477	10.72	7.29	0.68	2589	10.41	7.08	0.68	2685	9.55	6.50	0.68	2849	7.88	5.36	0.68	2956	6.50	4.42	0.68	3067
	29	24	12.05	6.75	0.56	2112	11.93	6.68	0.56	2131	11.80	6.61	0.56	2149	11.65	6.52	0.56	2166	11.53	6.46	0.56	2177	11.41	6.39	0.56	2247	11.25	6.30	0.56	2343	11.05	6.19	0.56	2497	10.79	6.04	0.56	2610	10.48	5.87	0.56	2705	9.62	5.39	0.56	2870	7.94	4.44	0.56	2977	6.55	3.67	0.56	3088
	29	26	12.22	5.38	0.44	2135	12.10	5.32	0.44	2154	11.97	5.26	0.44	2173	11.81	5.20	0.44	2190	11.69	5.15	0.44	2200	11.57	5.09	0.44	2271	11.41	5.02	0.44	2367	11.21	4.93	0.44	2521	10.94	4.82	0.44	2633	10.62	4.67	0.44	2729	9.75	4.29	0.44	2893	8.05	3.54	0.44	3000	6.64	2.92	0.44	3111
	30	18	11.61	10.45	0.90	2069	11.50	10.35	0.90	2088	11.37	10.23	0.90	2107	11.22	10.10	0.90	2124	11.11	10.00	0.90	2135	10.99	9.89	0.90	2206	10.84	9.76	0.90	2303	10.65	9.58	0.90	2458	10.40	9.36	0.90	2572	10.10	9.09	0.90	2668	9.27	8.34	0.90	2835	7.65	6.88	0.90	2943	6.31	5.68	0.90	3055
	30	20	11.85	9.95	0.84	2095	11.73	9.85	0.84	2114	11.60	9.75	0.84	2133	11.45	9.62	0.84	2150	11.34	9.53	0.84	2161	11.22	9.42	0.84	2231	11.06	9.29	0.84	2329	10.87	9.13	0.84	2484	10.61	8.91	0.84	2598	10.30	8.65	0.84	2694	9.46	7.94	0.84	2860	7.80	6.55	0.84	2968	6.44	5.41	0.84	3081
	30	22	12.08	8.70	0.72	2112	11.97	8.61	0.72	2131	11.84	8.52	0.72	2150	11.68	8.41	0.72	2167	11.57	8.33	0.72	2178	11.44	8.24	0.72	2249	11.28	8.12	0.72	2346	11.08	7.98	0.72	2502	10.82	7.79	0.72	2615	10.51	7.57	0.72	2712	9.65	6.95	0.72	2878	7.96	5.73	0.72	2986	6.57	4.73	0.72	3098
	30	24	12.17	7.30	0.60	2133	12.05	7.23	0.60	2152	11.92	7.15	0.60	2171	11.77	7.06	0.60	2188	11.65	6.99	0.60	2199	11.52	6.91	0.60	2270	11.36	6.82	0.60	2367	11.16	6.70	0.60	2522	10.90	6.54	0.60	2636	10.58	6.35	0.60	2732	9.72	5.83	0.60	2898	8.01	4.81	0.60	3007	6.61	3.97	0.60	3119
	30	26	12.34	5.92	0.48	2157	12.22	5.86	0.48	2176	12.09	5.80	0.48	2195	11.93	5.73	0.48	2212	11.81	5.67	0.48	2222	11.68	5.61	0.48	2293	11.52	5.53	0.48	2390	11.32	5.43	0.48	2546	11.05	5.31	0.48	2660	10.73	5.15	0.48	2756	9.85	4.73	0.48	2922	8.13	3.90	0.48	3030	6.70	3.22	0.48	3142
	31	18	11.73	10.55	0.90	2090	11.61	10.45	0.90	2109	11.48	10.34	0.90	2128	11.34	10.20	0.90	2145	11.22	10.10	0.90	2156	11.10	9.99	0.90	2228	10.95	9.85	0.90	2326	10.76	9.68	0.90	2483	10.50	9.45	0.90	2598	10.20	9.18	0.90	2695	9.36	8.43	0.90	2863	7.72	6.95	0.90	2972	6.37	5.73	0.90	3085
	31	20	11.97	10.53	0.88	2116	11.85	10.43	0.88	2135	11.72	10.31	0.88	2154	11.57	10.18	0.88	2171	11.45	10.08	0.88	2182	11.33	9.97	0.88	2254	11.17	9.83	0.88	2352	10.98	9.66	0.88	2509	10.72	9.43	0.88	2624	10.41	9.16	0.88	2721	9.55	8.41	0.88	2889	7.88	6.94	0.88	2998	6.50	5.72	0.88	3111
	31	22	12.21	9.28	0.76	2133	12.08	9.18	0.76	2153	11.95	9.08	0.76	2172	11.80	8.97	0.76	2189	11.68	8.88	0.76	2200	11.56	8.78	0.76	2271	11.40	8.66	0.76	2370	11.19	8.51	0.76	2527	10.93	8.31	0.76	2641	10.61	8.07	0.76	2739	9.74	7.41	0.76	2907	8.04	6.11	0.76	3016	6.63	5.04	0.76	3129
	31	24	12.29	7.87	0.64	2154	12.17	7.79	0.64	2173	12.04	7.70	0.64	2193	11.88	7.61	0.64	2210	11.77	7.53	0.64	2221	11.64	7.45	0.64	2292	11.48	7.35	0.64	2390	11.27	7.22	0.64	2548	11.01	7.05	0.64	2662	10.69	6.84	0.64	2760	9.81	6.28	0.64	2927	8.10	5.18	0.64	3037	6.68	4.27	0.64	3150
	31	26	12.46	6.48	0.52	2178	12.34	6.42	0.52	2197	12.21	6.35	0.52	2217	12.05	6.27	0.52	2234	11.93	6.20	0.52	2245	11.80	6.14	0.52	2316	11.64	6.05	0.52	2414	11.43	5.94	0.52	2571	11.16	5.81	0.52	2686	10.84	5.64	0.52	2784	9.95	5.17	0.52	2951	8.21	4.27	0.52	3061	6.77	3.52	0.52	3174
	32	18	11.84	10.66	0.90	2111	11.73	10.55	0.90	2130	11.60	10.44	0.90	2149	11.45	10.31	0.90	2167	11.34	10.20	0.90	2178	11.21	10.09	0.90	2250	11.06	9.95	0.90	2349	10.86	9.78	0.90	2508	10.61	9.55	0.90	2624	10.30	9.27	0.90	2722	9.46	8.51	0.90	2892	7.80	7.02	0.90	3002	6.44	5.79	0.90	3116
	32	20	12.09	10.88	0.90	2137	11.97	10.77	0.90	2156	11.84	10.65	0.90	2176	11.68	10.52	0.90	2193	11.57	10.41	0.90	2204	11.44	10.30	0.90	2276	11.28	10.16	0.90	2375	11.09	9.98	0.90	2534	10.83	9.74	0.90	2650	10.51	9.46	0.90	2748	9.65	8.68	0.90	2918	7.96	7.16	0.90	3028	6.57	5.91	0.90	3143
	32	22	12.33	9.86	0.80	2155	12.21	9.76	0.80	2174	12.07	9.66	0.80	2194	11.92	9.53	0.80	2211	11.80	9.44	0.80	2222	11.67	9.34	0.80	2294	11.51	9.21	0.80	2393	11.31	9.05	0.80	2552	11.04	8.83	0.80	2668	10.72	8.58	0.80	2766	9.84	7.87	0.80	2936	8.12	6.50	0.80	3046	6.70	5.36	0.80	3160
	32	24

Cooling Operation PERFORMANCE DATA

COMBINATION (%)	IDDB (°C)	ID WB (°C)	OUTDOOR DB (°C) -15 Q	-15 SHC	-15 SHF	-15 IPT	-7 Q	-7 SHC	-7 SHF	-7 IPT	0 Q	0 SHC	0 SHF	0 IPT	10 Q	10 SHC	10 SHF	10 IPT	15 Q	15 SHC	15 SHF	15 IPT	21 Q	21 SHC	21 SHF	21 IPT	25 Q	25 SHC	25 SHF	25 IPT	27 Q	27 SHC	27 SHF	27 IPT	30 Q	30 SHC	30 SHF	30 IPT	35 Q	35 SHC	35 SHF	35 IPT	40 Q	40 SHC	40 SHF	40 IPT	45 Q	45 SHC	45 SHF	45 IPT	50 Q	50 SHC	50 SHF	50 IPT
90%	21	18	9.49	5.69	0.60	1872	9.39	5.64	0.60	1889	9.29	5.57	0.60	1906	9.17	5.50	0.60	1921	9.08	5.45	0.60	1931	8.98	5.39	0.60	1995	8.86	5.31	0.60	2083	8.70	5.22	0.60	2224	8.50	5.10	0.60	2327	8.25	4.95	0.60	2414	7.57	4.54	0.60	2564	6.25	3.75	0.60	2662	5.15	3.09	0.60	2764
	21	20	9.88	4.74	0.48	1895	9.78	4.69	0.48	1912	9.67	4.64	0.48	1930	9.55	4.58	0.48	1945	9.46	4.54	0.48	1955	9.35	4.49	0.48	2019	9.22	4.43	0.48	2107	9.06	4.35	0.48	2247	8.85	4.25	0.48	2350	8.59	4.12	0.48	2437	7.89	3.79	0.48	2588	6.51	3.12	0.48	2686	5.37	2.58	0.48	2787
	22	18	9.78	6.26	0.64	1891	9.68	6.20	0.64	1908	9.58	6.13	0.64	1925	9.46	6.05	0.64	1941	9.36	5.99	0.64	1951	9.26	5.93	0.64	2015	9.13	5.84	0.64	2104	8.97	5.74	0.64	2246	8.76	5.61	0.64	2350	8.50	5.44	0.64	2438	7.81	5.00	0.64	2590	6.44	4.12	0.64	2689	5.31	3.40	0.64	2791
	22	20	10.08	5.24	0.52	1914	9.98	5.19	0.52	1932	9.87	5.13	0.52	1949	9.74	5.07	0.52	1965	9.65	5.02	0.52	1974	9.54	4.96	0.52	2039	9.41	4.89	0.52	2128	9.24	4.81	0.52	2270	9.03	4.69	0.52	2374	8.77	4.56	0.52	2462	8.05	4.18	0.52	2614	6.64	3.45	0.52	2713	5.48	2.85	0.52	2815
	22	22	10.25	4.10	0.40	1931	10.15	4.06	0.40	1948	10.04	4.02	0.40	1965	9.91	3.96	0.40	1981	9.81	3.92	0.40	1991	9.71	3.88	0.40	2055	9.57	3.83	0.40	2144	9.40	3.76	0.40	2286	9.18	3.67	0.40	2390	8.91	3.57	0.40	2478	8.18	3.27	0.40	2630	6.75	2.70	0.40	2729	5.57	2.23	0.40	2831
	23	18	9.98	6.79	0.68	1910	9.88	6.72	0.68	1927	9.77	6.65	0.68	1945	9.65	6.56	0.68	1960	9.55	6.50	0.68	1970	9.45	6.43	0.68	2036	9.32	6.34	0.68	2126	9.15	6.22	0.68	2269	8.94	6.08	0.68	2374	8.68	5.90	0.68	2463	7.97	5.42	0.68	2616	6.57	4.47	0.68	2716	5.42	3.69	0.68	2820
	23	20	10.29	5.76	0.56	1934	10.18	5.70	0.56	1951	10.07	5.64	0.56	1969	9.94	5.57	0.56	1985	9.85	5.51	0.56	1994	9.74	5.45	0.56	2060	9.60	5.38	0.56	2150	9.43	5.28	0.56	2293	9.21	5.16	0.56	2398	8.94	5.01	0.56	2487	8.21	4.60	0.56	2640	6.77	3.79	0.56	2740	5.59	3.13	0.56	2844
	23	22	10.46	4.60	0.44	1950	10.36	4.56	0.44	1967	10.24	4.51	0.44	1985	10.11	4.45	0.44	2001	10.01	4.41	0.44	2011	9.90	4.36	0.44	2076	9.77	4.30	0.44	2166	9.59	4.22	0.44	2309	9.37	4.12	0.44	2414	9.10	4.00	0.44	2503	8.35	3.67	0.44	2657	6.89	3.03	0.44	2756	5.68	2.50	0.44	2860
	24	18	10.18	7.33	0.72	1929	10.08	7.26	0.72	1947	9.97	7.18	0.72	1964	9.85	7.09	0.72	1980	9.75	7.02	0.72	1990	9.64	6.94	0.72	2056	9.51	6.85	0.72	2147	9.34	6.72	0.72	2292	9.12	6.57	0.72	2398	8.86	6.38	0.72	2488	8.13	5.85	0.72	2643	6.71	4.83	0.72	2743	5.53	3.98	0.72	2848
	24	20	10.50	6.30	0.60	1953	10.39	6.23	0.60	1971	10.28	6.17	0.60	1989	10.15	6.09	0.60	2005	10.05	6.03	0.60	2015	9.94	5.96	0.60	2081	9.80	5.88	0.60	2171	9.63	5.78	0.60	2316	9.40	5.64	0.60	2422	9.13	5.48	0.60	2512	8.38	5.03	0.60	2667	6.91	4.15	0.60	2768	5.70	3.42	0.60	2872
	24	22	10.67	5.12	0.48	1970	10.57	5.07	0.48	1987	10.45	5.02	0.48	2005	10.32	4.95	0.48	2021	10.22	4.90	0.48	2031	10.11	4.85	0.48	2097	9.97	4.78	0.48	2188	9.79	4.70	0.48	2333	9.56	4.59	0.48	2439	9.28	4.46	0.48	2529	8.52	4.09	0.48	2683	7.03	3.37	0.48	2784	5.80	2.78	0.48	2889
	24	24	10.82	3.90	0.36	1989	10.72	3.86	0.36	2007	10.60	3.82	0.36	2025	10.46	3.77	0.36	2040	10.36	3.73	0.36	2050	10.25	3.69	0.36	2117	10.11	3.64	0.36	2207	9.93	3.57	0.36	2352	9.69	3.49	0.36	2458	9.41	3.39	0.36	2548	8.64	3.11	0.36	2703	7.13	2.57	0.36	2804	5.88	2.12	0.36	2908
	25	18	10.50	7.98	0.76	1948	10.39	7.90	0.76	1966	10.28	7.81	0.76	1984	10.15	7.71	0.76	2000	10.05	7.64	0.76	2010	9.94	7.55	0.76	2077	9.80	7.45	0.76	2169	9.63	7.32	0.76	2315	9.40	7.15	0.76	2422	9.13	6.94	0.76	2513	8.38	6.37	0.76	2669	6.91	5.25	0.76	2771	5.70	4.34	0.76	2877
	25	20	10.82	6.92	0.64	1973	10.71	6.86	0.64	1991	10.60	6.78	0.64	2009	10.46	6.69	0.64	2025	10.36	6.63	0.64	2035	10.24	6.56	0.64	2102	10.10	6.47	0.64	2193	9.92	6.35	0.64	2340	9.69	6.20	0.64	2447	9.41	6.02	0.64	2537	8.64	5.53	0.64	2694	7.13	4.56	0.64	2796	5.88	3.76	0.64	2901
	25	22	11.00	5.72	0.52	1990	10.89	5.67	0.52	2007	10.78	5.60	0.52	2025	10.64	5.53	0.52	2041	10.53	5.48	0.52	2052	10.42	5.42	0.52	2118	10.27	5.34	0.52	2210	10.09	5.25	0.52	2356	9.86	5.13	0.52	2463	9.57	4.98	0.52	2554	8.78	4.57	0.52	2711	7.25	3.77	0.52	2812	5.98	3.11	0.52	2918
	25	24	11.16	4.46	0.40	2009	11.05	4.42	0.40	2027	10.93	4.37	0.40	2045	10.79	4.31	0.40	2061	10.68	4.27	0.40	2071	10.56	4.23	0.40	2138	10.42	4.17	0.40	2229	10.23	4.09	0.40	2376	9.99	4.00	0.40	2483	9.70	3.88	0.40	2574	8.91	3.56	0.40	2730	7.35	2.94	0.40	2832	6.06	2.43	0.40	2938
	26	18	10.82	8.66	0.80	1968	10.72	8.57	0.80	1986	10.60	8.48	0.80	2004	10.46	8.37	0.80	2021	10.36	8.29	0.80	2031	10.25	8.20	0.80	2098	10.11	8.08	0.80	2191	9.93	7.94	0.80	2339	9.69	7.76	0.80	2447	9.41	7.53	0.80	2538	8.64	6.91	0.80	2696	7.13	5.70	0.80	2799	5.88	4.70	0.80	2906
	26	20	11.15	7.59	0.68	1993	11.04	7.51	0.68	2011	10.92	7.43	0.68	2029	10.78	7.33	0.68	2045	10.68	7.26	0.68	2055	10.56	7.18	0.68	2123	10.41	7.08	0.68	2215	10.23	6.96	0.68	2363	9.99	6.79	0.68	2471	9.70	6.60	0.68	2563	8.90	6.06	0.68	2721	7.35	5.00	0.68	2824	6.06	4.12	0.68	2931
	26	22	11.34	6.35	0.56	2010	11.23	6.29	0.56	2028	11.11	6.22	0.56	2046	10.97	6.14	0.56	2062	10.86	6.08	0.56	2072	10.74	6.01	0.56	2140	10.59	5.93	0.56	2232	10.40	5.83	0.56	2380	10.16	5.69	0.56	2488	9.86	5.52	0.56	2580	9.06	5.07	0.56	2738	7.47	4.18	0.56	2841	6.16	3.45	0.56	2948
	26	24	11.50	5.06	0.44	2030	11.39	5.01	0.44	2048	11.27	4.96	0.44	2066	11.12	4.89	0.44	2082	11.01	4.84	0.44	2092	10.89	4.79	0.44	2160	10.74	4.73	0.44	2252	10.55	4.64	0.44	2400	10.30	4.53	0.44	2508	10.00	4.40	0.44	2600	9.18	4.04	0.44	2758	7.58	3.33	0.44	2861	6.25	2.75	0.44	2967
	26	26	11.69	3.74	0.32	2052	11.57	3.70	0.32	2070	11.45	3.66	0.32	2088	11.30	3.62	0.32	2105	11.19	3.58	0.32	2115	11.06	3.54	0.32	2182	10.91	3.49	0.32	2275	10.72	3.43	0.32	2423	10.47	3.35	0.32	2531	10.16	3.25	0.32	2623	9.33	2.99	0.32	2781	7.70	2.46	0.32	2883	6.35	2.03	0.32	2990
	27	18	11.04	9.28	0.84	1988	10.93	9.19	0.84	2006	10.82	9.09	0.84	2025	10.68	8.97	0.84	2041	10.57	8.88	0.84	2051	10.46	8.78	0.84	2119	10.31	8.66	0.84	2213	10.13	8.51	0.84	2362	9.89	8.31	0.84	2471	9.60	8.07	0.84	2564	8.82	7.41	0.84	2724	7.27	6.11	0.84	2827	6.00	5.04	0.84	2935
	27	19	11.27	8.79	0.78	1998	11.16	8.70	0.78	2016	11.04	8.61	0.78	2035	10.89	8.50	0.78	2051	10.79	8.41	0.78	2061	10.67	8.32	0.78	2129	10.52	8.21	0.78	2223	10.34	8.06	0.78	2372	10.09	7.87	0.78	2481	9.80	7.64	0.78	2574	9.00	7.02	0.78	2734	7.42	5.79	0.78	2837	6.12	4.78	0.78	2945
	27	20	11.38	8.20	0.72	2013	11.27	8.11	0.72	2031	11.15	8.03	0.72	2050	11.00	7.92	0.72	2066	10.89	7.84	0.72	2076	10.78	7.76	0.72	2144	10.63	7.65	0.72	2238	10.44	7.52	0.72	2387	10.19	7.34	0.72	2496	9.90	7.13	0.72	2589	9.09	6.54	0.72	2749	7.50	5.40	0.72	2852	6.18	4.45	0.72	2960
	27	22	11.58	6.95	0.60	2030	11.46	6.88	0.60	2048	11.34	6.80	0.60	2067	11.19	6.71	0.60	2083	11.08	6.65	0.60	2093	10.96	6.58	0.60	2161	10.81	6.48	0.60	2255	10.62	6.37	0.60	2404	10.37	6.22	0.60	2513	10.07	6.04	0.60	2606	9.24	5.54	0.60	2766	7.62	4.57	0.60	2869	6.29	3.77	0.60	2977
	27	24	11.74	5.63	0.48	2050	11.62	5.58	0.48	2068	11.50	5.52	0.48	2087	11.35	5.45	0.48	2103	11.24	5.39	0.48	2113	11.11	5.33	0.48	2181	10.96	5.26	0.48	2275	10.77	5.17	0.48	2424	10.51	5.05	0.48	2533	10.21	4.90	0.48	2626	9.37	4.50	0.48	2786	7.73	3.71	0.48	2889	6.38	3.06	0.48	2997
	27	26	11.93	4.29	0.36	2073	11.81	4.25	0.36	2091	11.68	4.20	0.36	2110	11.53	4.15	0.36	2126	11.41	4.11	0.36	2136	11.29	4.06	0.36	2204	11.13	4.01	0.36	2298	10.94	3.94	0.36	2447	10.68	3.85	0.36	2556	10.37	3.73	0.36	2649	9.52	3.43	0.36	2809	7.85	2.83	0.36	2912	6.48	2.33	0.36	3020
	28	18	11.15	9.82	0.88	2008	11.04	9.72	0.88	2026	10.92	9.61	0.88	2045	10.78	9.49	0.88	2061	10.68	9.40	0.88	2072	10.56	9.29	0.88	2141	10.41	9.17	0.88	2235	10.23	9.00	0.88	2386	9.99	8.79	0.88	2496	9.70	8.54	0.88	2590	8.90	7.84	0.88	2751	7.35	6.46	0.88	2856	6.06	5.33	0.88	2965
	28	20	11.38	8.65	0.76	2033	11.27	8.56	0.76	2052	11.15	8.47	0.76	2070	11.00	8.36	0.76	2087	10.89	8.28	0.76	2097	10.78	8.19	0.76	2166	10.63	8.08	0.76	2260	10.44	7.93	0.76	2411	10.19	7.75	0.76	2521	9.90	7.52	0.76	2615	9.09	6.91	0.76	2776	7.50	5.70	0.76	2881	6.18	4.70	0.76	2990
	28	22	11.50	7.36	0.64	2050	11.38	7.28	0.64	2069	11.26	7.21	0.64	2087	11.11	7.11	0.64	2104	11.00	7.04	0.64	2114	10.88	6.97	0.64	2183	10.73	6.87	0.64	2277	10.54	6.75	0.64	2428	10.30	6.59	0.64	2538	10.00	6.40	0.64	2632	9.18	5.87	0.64	2793	7.57	4.85	0.64	2898	6.25	4.00	0.64	3007
	28	24	11.69	6.08	0.52	2071	11.58	6.02	0.52	2089	11.45	5.95	0.52	2107	11.30	5.88	0.52	2124	11.19	5.82	0.52	2134	11.07	5.76	0.52	2203	10.92	5.68	0.52	2297	10.72	5.58	0.52	2448	10.47	5.45	0.52	2559	10.17	5.29	0.52	2652	9.33	4.85	0.52	2813	7.70	4.00	0.52	2918	6.35	3.30	0.52	3027
	28	26	11.86	4.74	0.40	2094	11.74	4.70	0.40	2112	11.61	4.64	0.40	2131	11.46	4.58	0.40	2147	11.35	4.54	0.40	2158	11.22	4.49	0.40	2226	11.07	4.43	0.40	2321	10.87	4.35	0.40	2472	10.62	4.25	0.40	2582	10.31	4.12	0.40	2675	9.46	3.79	0.40	2837	7.81	3.12	0.40	2942	6.44	2.58	0.40	3050
	29	18	11.27	10.14	0.90	2028	11.15	10.04	0.90	2047	11.03	9.93	0.90	2065	10.89	9.80	0.90	2082	10.78	9.71	0.90	2092	10.67	9.60	0.90	2162	10.52	9.47	0.90	2257	10.33	9.30	0.90	2410	10.09	9.08	0.90	2521	9.80	8.82	0.90	2616	8.99	8.09	0.90	2778	7.42	6.68	0.90	2884	6.12	5.51	0.90	2994
	29	20	11.50	9.20	0.80	2054	11.38	9.11	0.80	2072	11.26	9.01	0.80	2091	11.11	8.89	0.80	2107	11.00	8.80	0.80	2118	10.88	8.71	0.80	2187	10.73	8.59	0.80	2283	10.54	8.44	0.80	2435	10.30	8.24	0.80	2547	10.00	8.00	0.80	2641	9.18	7.34	0.80	2804	7.57	6.06	0.80	2910	6.25	5.00	0.80	3020
	29	22	11.73	7.97	0.68	2071	11.61	7.89	0.68	2089	11.48	7.81	0.68	2108	11.34	7.71	0.68	2125	11.22	7.63	0.68	2135	11.10	7.55	0.68	2205	10.95	7.44	0.68	2300	10.75	7.31	0.68	2452	10.50	7.14	0.68	2564	10.20	6.93	0.68	2658	9.36	6.37	0.68	2821	7.72	5.25	0.68	2927	6.37	4.33	0.68	3037
	29	24	11.81	6.61	0.56	2091	11.69	6.55	0.56	2110	11.56	6.48	0.56	2128	11.42	6.39	0.56	2145	11.30	6.33	0.56	2156	11.18	6.26	0.56	2225	11.03	6.17	0.56	2320	10.83	6.07	0.56	2473	10.58	5.92	0.56	2584	10.27	5.75	0.56	2679	9.43	5.28	0.56	2842	7.78	4.36	0.56	2948	6.42	3.59	0.56	3058
	29	26	11.97	5.27	0.44	2115	11.86	5.22	0.44	2133	11.73	5.16	0.44	2152	11.58	5.09	0.44	2169	11.46	5.04	0.44	2179	11.34	4.99	0.44	2249	11.18	4.92	0.44	2344	10.98	4.83	0.44	2496	10.72	4.72	0.44	2608	10.41	4.58	0.44	2702	9.56	4.21	0.44	2865	7.89	3.47	0.44	2971	6.51	2.86	0.44	3081
	30	18	11.38	10.24	0.90	2048	11.27	10.14	0.90	2067	11.14	10.03	0.90	2086	11.00	9.90	0.90	2103	10.89	9.80	0.90	2113	10.77	9.70	0.90	2184	10.62	9.56	0.90	2280	10.44	9.39	0.90	2434	10.19	9.17	0.90	2546	9.90	8.91	0.90	2642	9.08	8.18	0.90	2806	7.49	6.74	0.90	2913	6.18	5.56	0.90	3024
	30	20	11.61	9.75	0.84	2074	11.50	9.66	0.84	2093	11.37	9.55	0.84	2112	11.22	9.43	0.84	2129	11.11	9.34	0.84	2139	10.99	9.23	0.84	2209	10.84	9.11	0.84	2306	10.65	8.95	0.84	2459	10.40	8.74	0.84	2572	10.10	8.48	0.84	2667	9.27	7.79	0.84	2832	7.65	6.42	0.84	2939	6.31	5.30	0.84	3050
	30	22	11.84	8.53	0.72	2092	11.73	8.44	0.72	2110	11.60	8.35	0.72	2129	11.45	8.24	0.72	2146	11.34	8.16	0.72	2157	11.21	8.07	0.72	2227	11.06	7.96	0.72	2323	10.86	7.82	0.72	2477	10.61	7.64	0.72	2589	10.30	7.42	0.72	2685	9.45	6.81	0.72	2849	7.80	5.62	0.72	2956	6.43	4.63	0.72	3068
	30	24	11.93	7.16	0.60	2112	11.81	7.08	0.60	2131	11.68	7.01	0.60	2150	11.53	6.92	0.60	2167	11.42	6.85	0.60	2177	11.29	6.77	0.60	2247	11.14	6.68	0.60	2344	10.94	6.56	0.60	2498	10.68	6.41	0.60	2610	10.37	6.22	0.60	2706	9.52	5.71	0.60	2870	7.85	4.71	0.60	2977	6.48	3.89	0.60	3088
	30	26	12.09	5.80	0.48	2136	11.97	5.75	0.48	2155	11.84	5.68	0.48	2173	11.69	5.61	0.48	2190	11.58	5.56	0.48	2201	11.45	5.50	0.48	2271	11.29	5.42	0.48	2367	11.09	5.32	0.48	2521	10.83	5.20	0.48	2634	10.52	5.05	0.48	2729	9.65	4.63	0.48	2894	7.96	3.82	0.48	3001	6.57	3.15	0.48	3112
	31	18	11.49	10.34	0.90	2069	11.38	10.24	0.90	2088	11.25	10.13	0.90	2107	11.11	10.00	0.90	2124	11.00	9.90	0.90	2135	10.88	9.79	0.90	2205	10.73	9.66	0.90	2303	10.54	9.49	0.90	2458	10.29	9.26	0.90	2572	9.99	8.99	0.90	2668	9.17	8.26	0.90	2834	7.57	6.81	0.90	2942	6.24	5.62	0.90	3054
	31	20	11.73	10.32	0.88	2095	11.61	10.22	0.88	2114	11.48	10.11	0.88	2133	11.34	9.98	0.88	2150	11.22	9.88	0.88	2161	11.10	9.77	0.88	2231	10.95	9.64	0.88	2329	10.76	9.47	0.88	2484	10.50	9.24	0.88	2598	10.20	8.97	0.88	2694	9.36	8.24	0.88	2860	7.72	6.80	0.88	2968	6.37	5.61	0.88	3080
	31	22	11.96	9.09	0.76	2112	11.84	9.00	0.76	2131	11.71	8.90	0.76	2150	11.56	8.79	0.76	2167	11.45	8.70	0.76	2178	11.32	8.61	0.76	2249	11.17	8.49	0.76	2346	10.97	8.34	0.76	2502	10.71	8.14	0.76	2615	10.40	7.91	0.76	2712	9.55	7.26	0.76	2878	7.88	5.99	0.76	2986	6.50	4.94	0.76	3098
	31	24	12.05	7.71	0.64	2133	11.93	7.63	0.64	2152	11.80	7.55	0.64	2171	11.65	7.45	0.64	2188	11.53	7.38	0.64	2199	11.40	7.30	0.64	2270	11.25	7.20	0.64	2367	11.05	7.07	0.64	2523	10.79	6.91	0.64	2636	10.47	6.70	0.64	2733	9.62	6.15	0.64	2899	7.93	5.08	0.64	3007	6.54	4.19	0.64	3119
	31	26	12.21	6.35	0.52	2157	12.09	6.29	0.52	2176	11.96	6.22	0.52	2195	11.81	6.14	0.52	2212	11.69	6.08	0.52	2223	11.56	6.01	0.52	2294	11.40	5.93	0.52	2391	11.20	5.83	0.52	2547	10.94	5.69	0.52	2660	10.62	5.52	0.52	2757	9.75	5.07	0.52	2923	8.04	4.18	0.52	3031	6.64	3.45	0.52	3143
	32	18	11.61	10.45	0.90	2089	11.49	10.34	0.90	2109	11.37	10.23	0.90	2128	11.22	10.10	0.90	2145	11.11	10.00	0.90	2156	10.99	9.89	0.90	2227	10.84	9.75	0.90	2326	10.65	9.58	0.90	2483	10.40	9.36	0.90	2597	10.09	9.08	0.90	2695	9.27	8.34	0.90	2863	7.64	6.88	0.90	2972	6.31	5.68	0.90	3085
	32	20	11.84	10.66	0.90	2116	11.73	10.55	0.90	2135	11.60	10.44	0.90	2154	11.45	10.31	0.90	2171	11.34	10.20	0.90	2182	11.21	10.09	0.90	2254	11.06	9.95	0.90	2352	10.86	9.78	0.90	2509	10.61	9.55	0.90	2624	10.30	9.27	0.90	2721	9.46	8.51	0.90	2889	7.80	7.02	0.90	2998	6.44	5.79	0.90	3111
	32	22	12.08	9.66	0.80	2134	11.96	9.57	0.80	2153	11.83	9.47	0.80	2172	11.68	9.34	0.80	2189	11.56	9.25	0.80	2200	11.44	9.15	0.80	2272	11.28	9.02	0.80	2370	11.08	8.86	0.80	2527	10.82	8.66	0.80	2642	10.51	8.40	0.80	2739

4. CAPACITIES AND SELECTION DATA

Cooling Operation PERFORMANCE DATA

COMBINATION (%)	ID DB (°C)	ID WB (°C)	OUTDOOR DB (°C) -15 Q	-15 SHC	-15 SHF	-15 IPT	-7 Q	-7 SHC	-7 SHF	-7 IPT	0 Q	0 SHC	0 SHF	0 IPT	10 Q	10 SHC	10 SHF	10 IPT	15 Q	15 SHC	15 SHF	15 IPT	21 Q	21 SHC	21 SHF	21 IPT	25 Q	25 SHC	25 SHF	25 IPT	27 Q	27 SHC	27 SHF	27 IPT	30 Q	30 SHC	30 SHF	30 IPT	35 Q	35 SHC	35 SHF	35 IPT	40 Q	40 SHC	40 SHF	40 IPT	45 Q	45 SHC	45 SHF	45 IPT	50 Q	50 SHC	50 SHF	50 IPT
80%	21	18	9.20	5.52	0.60	1853	9.11	5.46	0.60	1870	9.01	5.40	0.60	1887	8.89	5.33	0.60	1902	8.80	5.28	0.60	1912	8.71	5.22	0.60	1975	8.59	5.15	0.60	2062	8.43	5.06	0.60	2201	8.24	4.94	0.60	2303	8.00	4.80	0.60	2389	7.34	4.40	0.60	2538	6.06	3.63	0.60	2635	5.00	3.00	0.60	2736
	21	20	9.58	4.60	0.48	1876	9.48	4.55	0.48	1893	9.38	4.50	0.48	1910	9.26	4.44	0.48	1926	9.17	4.40	0.48	1935	9.07	4.35	0.48	1999	8.94	4.29	0.48	2086	8.78	4.22	0.48	2225	8.58	4.12	0.48	2327	8.33	4.00	0.48	2413	7.64	3.67	0.48	2562	6.31	3.03	0.48	2659	5.20	2.50	0.48	2759
	22	18	9.48	6.07	0.64	1871	9.39	6.01	0.64	1889	9.28	5.94	0.64	1906	9.17	5.87	0.64	1921	9.07	5.81	0.64	1931	8.98	5.74	0.64	1995	8.85	5.67	0.64	2083	8.70	5.57	0.64	2224	8.49	5.43	0.64	2326	8.24	5.28	0.64	2414	7.57	4.84	0.64	2564	6.24	4.00	0.64	2662	5.15	3.30	0.64	2763
	22	20	9.77	5.08	0.52	1895	9.67	5.03	0.52	1912	9.57	4.98	0.52	1930	9.45	4.91	0.52	1945	9.35	4.86	0.52	1955	9.25	4.81	0.52	2019	9.12	4.74	0.52	2107	8.96	4.66	0.52	2247	8.75	4.55	0.52	2350	8.50	4.42	0.52	2437	7.80	4.06	0.52	2588	6.44	3.35	0.52	2685	5.31	2.76	0.52	2787
	22	22	9.94	3.97	0.40	1911	9.84	3.94	0.40	1928	9.73	3.89	0.40	1946	9.61	3.84	0.40	1961	9.51	3.80	0.40	1971	9.41	3.76	0.40	2035	9.28	3.71	0.40	2123	9.11	3.65	0.40	2264	8.90	3.56	0.40	2366	8.64	3.46	0.40	2454	7.93	3.17	0.40	2604	6.54	2.62	0.40	2702	5.40	2.16	0.40	2803
	23	18	9.67	6.58	0.68	1890	9.58	6.51	0.68	1908	9.47	6.44	0.68	1925	9.35	6.36	0.68	1941	9.26	6.30	0.68	1950	9.16	6.23	0.68	2015	9.03	6.14	0.68	2104	8.87	6.03	0.68	2246	8.67	5.89	0.68	2350	8.41	5.72	0.68	2438	7.72	5.25	0.68	2590	6.37	4.33	0.68	2689	5.26	3.57	0.68	2791
	23	20	9.97	5.58	0.56	1914	9.87	5.53	0.56	1932	9.76	5.47	0.56	1949	9.64	5.40	0.56	1965	9.54	5.34	0.56	1974	9.44	5.29	0.56	2039	9.31	5.21	0.56	2128	9.14	5.12	0.56	2270	8.93	5.00	0.56	2374	8.67	4.86	0.56	2462	7.96	4.46	0.56	2614	6.57	3.68	0.56	2713	5.42	3.03	0.56	2815
	23	22	10.14	4.46	0.44	1931	10.04	4.42	0.44	1948	9.93	4.37	0.44	1965	9.80	4.31	0.44	1981	9.71	4.27	0.44	1991	9.60	4.22	0.44	2056	9.47	4.17	0.44	2144	9.30	4.09	0.44	2286	9.08	4.00	0.44	2390	8.82	3.88	0.44	2478	8.09	3.56	0.44	2630	6.68	2.94	0.44	2729	5.51	2.42	0.44	2831
	24	18	9.87	7.11	0.72	1909	9.77	7.04	0.72	1927	9.67	6.96	0.72	1944	9.54	6.87	0.72	1960	9.45	6.80	0.72	1970	9.35	6.73	0.72	2036	9.22	6.64	0.72	2125	9.05	6.52	0.72	2269	8.84	6.37	0.72	2374	8.58	6.18	0.72	2463	7.88	5.67	0.72	2616	6.50	4.68	0.72	2716	5.36	3.86	0.72	2819
	24	20	10.17	6.10	0.60	1934	10.07	6.04	0.60	1951	9.96	5.98	0.60	1969	9.84	5.90	0.60	1984	9.74	5.84	0.60	1994	9.63	5.78	0.60	2060	9.50	5.70	0.60	2149	9.33	5.60	0.60	2293	9.11	5.47	0.60	2398	8.85	5.31	0.60	2487	8.12	4.87	0.60	2640	6.70	4.02	0.60	2740	5.53	3.32	0.60	2843
	24	22	10.35	4.97	0.48	1950	10.24	4.92	0.48	1968	10.13	4.86	0.48	1985	10.00	4.80	0.48	2001	9.90	4.75	0.48	2011	9.80	4.70	0.48	2076	9.66	4.64	0.48	2166	9.49	4.56	0.48	2310	9.27	4.45	0.48	2414	9.00	4.32	0.48	2503	8.26	3.96	0.48	2657	6.81	3.27	0.48	2756	5.62	2.70	0.48	2860
	24	24	10.49	3.78	0.36	1970	10.39	3.74	0.36	1987	10.27	3.70	0.36	2005	10.14	3.65	0.36	2020	10.04	3.62	0.36	2030	9.93	3.58	0.36	2096	9.80	3.53	0.36	2185	9.62	3.46	0.36	2329	9.40	3.38	0.36	2434	9.12	3.28	0.36	2523	8.38	3.02	0.36	2676	6.91	2.49	0.36	2776	5.70	2.05	0.36	2879
	25	18	10.18	7.73	0.76	1929	10.08	7.66	0.76	1946	9.97	7.57	0.76	1964	9.84	7.48	0.76	1980	9.74	7.40	0.76	1990	9.64	7.32	0.76	2056	9.50	7.22	0.76	2147	9.33	7.09	0.76	2292	9.12	6.93	0.76	2398	8.85	6.73	0.76	2487	8.12	6.17	0.76	2642	6.70	5.09	0.76	2743	5.53	4.20	0.76	2848
	25	20	10.49	6.71	0.64	1953	10.38	6.65	0.64	1971	10.27	6.57	0.64	1989	10.14	6.49	0.64	2004	10.04	6.43	0.64	2014	9.93	6.36	0.64	2081	9.79	6.27	0.64	2171	9.62	6.16	0.64	2316	9.39	6.01	0.64	2422	9.12	5.84	0.64	2512	8.37	5.36	0.64	2667	6.91	4.42	0.64	2768	5.70	3.65	0.64	2872
	25	22	10.67	5.55	0.52	1970	10.56	5.49	0.52	1987	10.45	5.43	0.52	2005	10.31	5.36	0.52	2021	10.21	5.31	0.52	2031	10.10	5.25	0.52	2097	9.96	5.18	0.52	2188	9.78	5.09	0.52	2333	9.55	4.97	0.52	2439	9.28	4.82	0.52	2529	8.52	4.43	0.52	2683	7.03	3.65	0.52	2784	5.80	3.01	0.52	2889
	25	24	10.82	4.33	0.40	1989	10.71	4.28	0.40	2007	10.59	4.24	0.40	2025	10.46	4.18	0.40	2041	10.35	4.14	0.40	2051	10.24	4.10	0.40	2117	10.10	4.04	0.40	2207	9.92	3.97	0.40	2352	9.69	3.88	0.40	2458	9.41	3.76	0.40	2548	8.63	3.45	0.40	2703	7.12	2.85	0.40	2804	5.88	2.35	0.40	2908
	26	18	10.49	8.39	0.80	1948	10.39	8.31	0.80	1966	10.27	8.22	0.80	1984	10.14	8.11	0.80	2000	10.04	8.03	0.80	2010	9.93	7.95	0.80	2077	9.80	7.84	0.80	2168	9.62	7.70	0.80	2315	9.40	7.52	0.80	2422	9.12	7.30	0.80	2513	8.38	6.70	0.80	2669	6.91	5.53	0.80	2771	5.70	4.56	0.80	2876
	26	20	10.81	7.35	0.68	1973	10.71	7.28	0.68	1991	10.59	7.20	0.68	2009	10.45	7.11	0.68	2025	10.35	7.04	0.68	2035	10.24	6.96	0.68	2102	10.10	6.87	0.68	2193	9.92	6.74	0.68	2340	9.69	6.59	0.68	2447	9.40	6.39	0.68	2537	8.63	5.87	0.68	2694	7.12	4.84	0.68	2796	5.88	4.00	0.68	2901
	26	22	11.00	6.16	0.56	1990	10.89	6.10	0.56	2008	10.77	6.03	0.56	2025	10.63	5.95	0.56	2042	10.53	5.89	0.56	2052	10.41	5.83	0.56	2118	10.27	5.75	0.56	2210	10.09	5.65	0.56	2356	9.85	5.52	0.56	2463	9.56	5.36	0.56	2554	8.78	4.92	0.56	2711	7.24	4.06	0.56	2812	5.98	3.35	0.56	2918
	26	24	11.15	4.91	0.44	2010	11.04	4.86	0.44	2027	10.92	4.80	0.44	2045	10.78	4.74	0.44	2061	10.67	4.70	0.44	2071	10.56	4.65	0.44	2138	10.41	4.58	0.44	2230	10.23	4.50	0.44	2376	9.99	4.39	0.44	2483	9.70	4.27	0.44	2574	8.90	3.92	0.44	2730	7.34	3.23	0.44	2832	6.06	2.67	0.44	2938
	26	26	11.33	3.63	0.32	2032	11.22	3.59	0.32	2050	11.10	3.55	0.32	2068	10.95	3.50	0.32	2084	10.84	3.47	0.32	2094	10.73	3.43	0.32	2161	10.58	3.38	0.32	2253	10.39	3.33	0.32	2399	10.15	3.25	0.32	2506	9.85	3.15	0.32	2597	9.04	2.89	0.32	2753	7.46	2.39	0.32	2855	6.16	1.97	0.32	2961
	27	18	10.71	8.99	0.84	1968	10.60	8.90	0.84	1986	10.48	8.81	0.84	2004	10.35	8.69	0.84	2020	10.25	8.61	0.84	2030	10.14	8.51	0.84	2098	10.00	8.40	0.84	2190	9.82	8.25	0.84	2338	9.59	8.06	0.84	2446	9.31	7.82	0.84	2538	8.55	7.18	0.84	2696	7.05	5.92	0.84	2799	5.82	4.89	0.84	2906
	27	19	10.92	8.52	0.78	1978	10.82	8.44	0.78	1996	10.70	8.34	0.78	2014	10.56	8.24	0.78	2030	10.46	8.16	0.78	2040	10.34	8.07	0.78	2108	10.20	7.96	0.78	2200	10.02	7.82	0.78	2348	9.79	7.63	0.78	2456	9.50	7.41	0.78	2548	8.72	6.80	0.78	2706	7.19	5.61	0.78	2809	5.94	4.63	0.78	2916
	27	20	11.03	7.94	0.72	1993	10.92	7.87	0.72	2011	10.81	7.78	0.72	2029	10.67	7.68	0.72	2045	10.56	7.60	0.72	2055	10.45	7.52	0.72	2123	10.30	7.42	0.72	2215	10.12	7.29	0.72	2363	9.88	7.12	0.72	2471	9.60	6.91	0.72	2563	8.81	6.34	0.72	2721	7.27	5.23	0.72	2824	6.00	4.32	0.72	2931
	27	22	11.22	6.73	0.60	2010	11.11	6.67	0.60	2028	10.99	6.59	0.60	2046	10.85	6.51	0.60	2062	10.74	6.44	0.60	2072	10.62	6.37	0.60	2140	10.48	6.29	0.60	2232	10.29	6.18	0.60	2380	10.05	6.03	0.60	2488	9.76	5.85	0.60	2580	8.96	5.37	0.60	2738	7.39	4.43	0.60	2841	6.10	3.66	0.60	2948
	27	24	11.38	5.46	0.48	2030	11.27	5.41	0.48	2048	11.14	5.35	0.48	2066	11.00	5.28	0.48	2082	10.89	5.23	0.48	2092	10.77	5.17	0.48	2160	10.62	5.10	0.48	2252	10.44	5.01	0.48	2400	10.19	4.89	0.48	2508	9.89	4.75	0.48	2600	9.08	4.36	0.48	2758	7.49	3.60	0.48	2861	6.18	2.97	0.48	2968
	27	26	11.56	4.16	0.36	2053	11.45	4.12	0.36	2071	11.32	4.08	0.36	2089	11.18	4.02	0.36	2105	11.07	3.98	0.36	2115	10.95	3.94	0.36	2183	10.79	3.89	0.36	2275	10.60	3.82	0.36	2423	10.35	3.73	0.36	2531	10.05	3.62	0.36	2623	9.23	3.32	0.36	2781	7.61	2.74	0.36	2884	6.28	2.26	0.36	2991
	28	18	10.81	9.52	0.88	1988	10.71	9.42	0.88	2006	10.59	9.32	0.88	2024	10.45	9.20	0.88	2040	10.35	9.11	0.88	2051	10.24	9.01	0.88	2119	10.10	8.88	0.88	2212	9.92	8.73	0.88	2362	9.69	8.52	0.88	2471	9.40	8.27	0.88	2563	8.63	7.60	0.88	2723	7.12	6.27	0.88	2827	5.88	5.17	0.88	2935
	28	20	11.03	8.39	0.76	2013	10.92	8.30	0.76	2031	10.81	8.21	0.76	2049	10.67	8.11	0.76	2066	10.56	8.03	0.76	2076	10.45	7.94	0.76	2144	10.30	7.83	0.76	2237	10.12	7.69	0.76	2387	9.88	7.51	0.76	2496	9.60	7.29	0.76	2589	8.81	6.69	0.76	2748	7.27	5.52	0.76	2852	6.00	4.56	0.76	2960
	28	22	11.14	7.13	0.64	2030	11.03	7.06	0.64	2048	10.91	6.98	0.64	2066	10.77	6.90	0.64	2083	10.67	6.83	0.64	2093	10.55	6.75	0.64	2161	10.41	6.66	0.64	2255	10.22	6.54	0.64	2404	9.98	6.39	0.64	2513	9.69	6.20	0.64	2606	8.90	5.69	0.64	2765	7.34	4.70	0.64	2869	6.06	3.88	0.64	2977
	28	24	11.33	5.89	0.52	2050	11.22	5.84	0.52	2068	11.10	5.77	0.52	2087	10.96	5.70	0.52	2103	10.85	5.64	0.52	2113	10.73	5.58	0.52	2181	10.58	5.50	0.52	2275	10.39	5.41	0.52	2424	10.15	5.28	0.52	2533	9.86	5.12	0.52	2626	9.05	4.70	0.52	2786	7.46	3.88	0.52	2889	6.16	3.20	0.52	2997
	28	26	11.49	4.60	0.40	2073	11.38	4.55	0.40	2092	11.25	4.50	0.40	2110	11.11	4.44	0.40	2126	11.00	4.40	0.40	2137	10.88	4.35	0.40	2205	10.73	4.29	0.40	2298	10.54	4.22	0.40	2447	10.29	4.12	0.40	2557	9.99	4.00	0.40	2649	9.17	3.67	0.40	2809	7.57	3.03	0.40	2913	6.24	2.50	0.40	3020
	29	18	10.92	9.83	0.90	2007	10.81	9.73	0.90	2026	10.70	9.63	0.90	2044	10.56	9.50	0.90	2061	10.45	9.41	0.90	2071	10.34	9.31	0.90	2140	10.20	9.18	0.90	2234	10.02	9.02	0.90	2385	9.78	8.80	0.90	2495	9.50	8.55	0.90	2589	8.72	7.85	0.90	2750	7.19	6.47	0.90	2855	5.93	5.34	0.90	2964
	29	20	11.14	8.92	0.80	2033	11.03	8.83	0.80	2051	10.91	8.73	0.80	2070	10.77	8.62	0.80	2086	10.67	8.53	0.80	2097	10.55	8.44	0.80	2166	10.41	8.32	0.80	2260	10.22	8.18	0.80	2411	9.98	7.99	0.80	2521	9.69	7.75	0.80	2615	8.90	7.12	0.80	2776	7.34	5.87	0.80	2881	6.06	4.84	0.80	2989
	29	22	11.37	7.73	0.68	2050	11.25	7.65	0.68	2069	11.13	7.57	0.68	2087	10.99	7.47	0.68	2104	10.88	7.40	0.68	2114	10.76	7.32	0.68	2183	10.61	7.22	0.68	2277	10.43	7.09	0.68	2428	10.18	6.92	0.68	2538	9.88	6.72	0.68	2632	9.07	6.17	0.68	2793	7.49	5.09	0.68	2898	6.18	4.20	0.68	3007
	29	24	11.45	6.41	0.56	2071	11.33	6.35	0.56	2089	11.21	6.28	0.56	2107	11.07	6.20	0.56	2124	10.96	6.14	0.56	2134	10.84	6.07	0.56	2203	10.69	5.99	0.56	2298	10.50	5.88	0.56	2448	10.25	5.74	0.56	2559	9.95	5.57	0.56	2652	9.14	5.12	0.56	2813	7.54	4.22	0.56	2918	6.22	3.48	0.56	3027
	29	26	11.61	5.11	0.44	2094	11.49	5.06	0.44	2112	11.37	5.00	0.44	2131	11.22	4.94	0.44	2148	11.11	4.89	0.44	2158	10.99	4.84	0.44	2227	10.84	4.77	0.44	2321	10.65	4.68	0.44	2472	10.40	4.57	0.44	2582	10.09	4.44	0.44	2676	9.27	4.08	0.44	2837	7.64	3.36	0.44	2942	6.31	2.77	0.44	3051
	30	18	11.03	9.93	0.90	2027	10.92	9.83	0.90	2046	10.80	9.72	0.90	2065	10.66	9.60	0.90	2081	10.56	9.50	0.90	2092	10.44	9.40	0.90	2161	10.30	9.27	0.90	2257	10.12	9.11	0.90	2409	9.88	8.89	0.90	2520	9.59	8.63	0.90	2615	8.81	7.92	0.90	2778	7.26	6.54	0.90	2884	5.99	5.39	0.90	2994
	30	20	11.26	9.45	0.84	2053	11.14	9.36	0.84	2072	11.02	9.26	0.84	2090	10.88	9.14	0.84	2107	10.77	9.05	0.84	2118	10.66	8.95	0.84	2187	10.51	8.83	0.84	2282	10.32	8.67	0.84	2435	10.08	8.47	0.84	2546	9.79	8.22	0.84	2641	8.99	7.55	0.84	2803	7.41	6.23	0.84	2909	6.12	5.14	0.84	3019
	30	22	11.48	8.27	0.72	2071	11.37	8.18	0.72	2089	11.24	8.10	0.72	2108	11.10	7.99	0.72	2125	10.99	7.91	0.72	2135	10.87	7.83	0.72	2205	10.72	7.72	0.72	2300	10.53	7.58	0.72	2452	10.28	7.40	0.72	2564	9.98	7.19	0.72	2658	9.16	6.60	0.72	2821	7.56	5.44	0.72	2927	6.24	4.49	0.72	3037
	30	24	11.56	6.94	0.60	2091	11.45	6.87	0.60	2110	11.32	6.79	0.60	2129	11.18	6.71	0.60	2145	11.07	6.64	0.60	2156	10.95	6.57	0.60	2225	10.79	6.48	0.60	2321	10.60	6.36	0.60	2473	10.36	6.21	0.60	2584	10.05	6.03	0.60	2679	9.23	5.54	0.60	2842	7.61	4.57	0.60	2947	6.28	3.77	0.60	3057
	30	26	11.72	5.63	0.48	2115	11.61	5.57	0.48	2134	11.48	5.51	0.48	2152	11.33	5.44	0.48	2169	11.22	5.39	0.48	2179	11.10	5.33	0.48	2249	10.95	5.25	0.48	2344	10.75	5.16	0.48	2497	10.50	5.04	0.48	2608	10.19	4.89	0.48	2702	9.36	4.49	0.48	2865	7.72	3.71	0.48	2971	6.37	3.06	0.48	3081
	31	18	11.14	10.03	0.90	2048	11.03	9.93	0.90	2066	10.91	9.82	0.90	2085	10.77	9.69	0.90	2102	10.66	9.60	0.90	2113	10.55	9.49	0.90	2183	10.40	9.36	0.90	2279	10.22	9.20	0.90	2433	9.98	8.98	0.90	2546	9.69	8.72	0.90	2641	8.89	8.00	0.90	2805	7.34	6.60	0.90	2912	6.05	5.45	0.90	3024
	31	20	11.37	10.00	0.88	2074	11.26	9.90	0.88	2092	11.13	9.80	0.88	2111	10.99	9.67	0.88	2128	10.88	9.58	0.88	2139	10.76	9.47	0.88	2209	10.61	9.34	0.88	2305	10.43	9.18	0.88	2459	10.18	8.96	0.88	2572	9.89	8.70	0.88	2667	9.08	7.99	0.88	2831	7.49	6.59	0.88	2938	6.18	5.44	0.88	3050
	31	22	11.60	8.81	0.76	2091	11.48	8.73	0.76	2110	11.36	8.63	0.76	2129	11.21	8.52	0.76	2146	11.10	8.44	0.76	2157	10.98	8.34	0.76	2227	10.83	8.23	0.76	2323	10.64	8.08	0.76	2477	10.39	7.89	0.76	2589	10.08	7.66	0.76	2685	9.26	7.04	0.76	2849	7.64	5.80	0.76	2956	6.30	4.79	0.76	3067
	31	24	11.68	7.47	0.64	2112	11.56	7.40	0.64	2131	11.44	7.32	0.64	2150	11.29	7.22	0.64	2167	11.18	7.15	0.64	2177	11.06	7.08	0.64	2248	10.90	6.98	0.64	2344	10.71	6.85	0.64	2498	10.46	6.69	0.64	2610	10.15	6.50	0.64	2706	9.32	5.97	0.64	2870	7.69	4.92	0.64	2977	6.34	4.06	0.64	3088
	31	26	11.84	6.16	0.52	2136	11.72	6.10	0.52	2155	11.60	6.03	0.52	2174	11.45	5.95	0.52	2191	11.33	5.89	0.52	2201	11.21	5.83	0.52	2271	11.06	5.75	0.52	2368	10.86	5.65	0.52	2522	10.61	5.51	0.52	2634	10.30	5.35	0.52	2730	9.45	4.92	0.52	2894	7.80	4.05	0.52	3001	6.43	3.35	0.52	3112
	32	18	11.25	10.13	0.90	2068	11.14	10.03	0.90	2087	11.02	9.92	0.90	2106	10.88	9.79	0.90	2123	10.77	9.69	0.90	2134	10.65	9.59	0.90	2205	10.51	9.46	0.90	2302	10.32	9.29	0.90	2457	10.08	9.07	0.90	2571	9.78	8.81	0.90	2667	8.98	8.08	0.90	2833	7.41	6.67	0.90	2942	6.11	5.50	0.90	3054
	32	20	11.48	10.33	0.90	2095	11.37	10.23	0.90	2113	11.24	10.12	0.90	2132	11.10	9.99	0.90	2150	10.99	9.89	0.90	2160	10.87	9.78	0.90	2231	10.72	9.65	0.90	2328	10.53	9.48	0.90	2484	10.28	9.26	0.90	2597	9.98	8.99	0.90	2694	9.17	8.25	0.90	2860	7.56	6.81	0.90	2968	6.24	5.61	0.90	3080
	32	22	11.71	9.37	0.80	2112	11.60	9.28	0.80	2131	11.47	9.18	0.80	2150	11.32	9.06	0.80	2167	11.21	8.97	0.80	2178	11.09	8.87	0.80	2249	10.93	8.75	0.80	2346	10.74	8.59	0.80	2502	10.49	8.39	0.80	2615	10.18	8.15	0.80	2712	9.35	7.48	0.80	2

36K (Up to 5 IDUs)

HEATING PERFORMANCE DATA

COMBINATION (%)	INDOOR DB(℃)	OUTDOOR WB(℃)									
		0		5		10		15		20	
		Q	INPUT	Q	INPUT	Q	INPUT	Q	INPUT	Q	INPUT
130%	15	11.42	2804	12.42	2952	13.41	3099	14.08	3192	14.50	3256
	16	11.29	2827	12.27	2976	13.25	3124	13.91	3218	14.33	3282
	17	11.15	2850	12.12	3000	13.09	3150	13.75	3244	14.16	3309
	18	11.02	2873	11.98	3024	12.94	3175	13.58	3270	13.99	3336
	19	10.89	2896	11.84	3048	12.78	3201	13.42	3297	13.83	3363
	20	10.78	2919	11.72	3073	12.66	3226	13.29	3323	13.69	3390
	21	10.65	2951	11.58	3107	12.51	3262	13.13	3360	13.52	3427
	22	10.52	2984	11.44	3141	12.36	3298	12.97	3397	13.36	3465
	23	10.40	3017	11.30	3175	12.21	3334	12.82	3434	13.20	3503
	24	10.27	3050	11.17	3210	12.06	3371	12.66	3472	13.04	3541
	25	10.15	3083	11.03	3246	11.92	3408	12.51	3510	12.89	3580
	26	10.03	3117	10.90	3281	11.77	3445	12.36	3549	12.73	3620
	27	9.91	3151	10.77	3317	11.63	3483	12.21	3588	12.58	3659
	28	9.79	3186	10.64	3354	11.49	3521	12.07	3627	12.43	3700
	29	9.67	3221	10.51	3391	11.35	3560	11.92	3667	12.28	3740
	30	9.56	3257	10.39	3428	11.22	3599	11.78	3707	12.13	3782
COMBINATION (%)	INDOOR DB(℃)	OUTDOOR WB(℃)									
		0		5		10		15		20	
		Q	INPUT	Q	INPUT	Q	INPUT	Q	INPUT	Q	INPUT
120%	15	11.09	2671	12.05	2811	13.02	2952	13.67	3040	14.08	3101
	16	10.96	2692	11.91	2834	12.86	2976	13.51	3065	13.91	3126
	17	10.83	2714	11.77	2857	12.71	3000	13.35	3090	13.75	3151
	18	10.70	2736	11.63	2880	12.56	3024	13.19	3114	13.58	3177
	19	10.57	2758	11.49	2903	12.41	3048	13.03	3140	13.42	3202
	20	10.47	2780	11.38	2926	12.29	3073	12.90	3165	13.29	3228
	21	10.34	2811	11.24	2959	12.14	3107	12.75	3200	13.13	3264
	22	10.22	2842	11.11	2991	12.00	3141	12.60	3235	12.97	3300
	23	10.10	2873	10.97	3024	11.85	3175	12.44	3271	12.82	3336
	24	9.97	2904	10.84	3057	11.71	3210	12.29	3307	12.66	3373
	25	9.85	2936	10.71	3091	11.57	3246	12.15	3343	12.51	3410
	26	9.74	2969	10.58	3125	11.43	3281	12.00	3380	12.36	3447
	27	9.62	3001	10.46	3159	11.29	3317	11.86	3417	12.21	3485
	28	9.50	3034	10.33	3194	11.16	3354	11.71	3454	12.07	3523
	29	9.39	3068	10.21	3229	11.02	3391	11.57	3492	11.92	3562
	30	9.28	3102	10.08	3265	10.89	3428	11.44	3531	11.78	3601
COMBINATION (%)	INDOOR DB(℃)	OUTDOOR WB(℃)									
		0		5		10		15		20	
		Q	INPUT	Q	INPUT	Q	INPUT	Q	INPUT	Q	INPUT
110%	15	10.77	2618	11.70	2756	12.64	2894	13.27	2981	13.67	3040
	16	10.64	2639	11.56	2778	12.49	2917	13.11	3005	13.51	3065
	17	10.51	2661	11.43	2801	12.34	2941	12.96	3029	13.35	3090
	18	10.39	2682	11.29	2823	12.19	2964	12.80	3053	13.19	3114
	19	10.26	2704	11.16	2846	12.05	2988	12.65	3078	13.03	3140
	20	10.16	2726	11.05	2869	11.93	3013	12.53	3103	12.90	3165
	21	10.04	2756	10.91	2901	11.79	3046	12.38	3137	12.75	3200
	22	9.92	2786	10.78	2933	11.65	3079	12.23	3172	12.60	3235
	23	9.80	2817	10.65	2965	11.51	3113	12.08	3206	12.44	3271
	24	9.68	2848	10.53	2997	11.37	3147	11.94	3242	12.29	3307
	25	9.57	2879	10.40	3030	11.23	3182	11.79	3277	12.15	3343
	26	9.45	2911	10.27	3064	11.10	3217	11.65	3313	12.00	3380
	27	9.34	2943	10.15	3097	10.96	3252	11.51	3350	11.86	3417
	28	9.23	2975	10.03	3131	10.83	3288	11.37	3387	11.71	3454
	29	9.12	3008	9.91	3166	10.70	3324	11.24	3424	11.57	3492
	30	9.01	3041	9.79	3201	10.57	3361	11.10	3462	11.44	3531

4. CAPACITIES AND SELECTION DATA

HEATING PERFORMANCE DATA

COMBINATION (%)	INDOOR DB(℃)	OUTDOOR WB(℃)									
		0		5		10		15		20	
		Q	INPUT	Q	INPUT	Q	INPUT	Q	INPUT	Q	INPUT
100%	15	10.45	2542	11.36	2676	12.27	2810	12.88	2894	13.27	2952
	16	10.33	2563	11.23	2697	12.13	2832	12.73	2917	13.11	2976
	17	10.21	2583	11.09	2719	11.98	2855	12.58	2941	12.96	3000
	18	10.09	2604	10.96	2741	11.84	2878	12.43	2964	12.80	3024
	19	9.97	2625	10.83	2763	11.70	2901	12.28	2988	12.65	3048
	20	9.87	2646	10.73	2785	11.58	2925	12.16	3013	12.53	3073
	21	9.75	2675	10.60	2816	11.44	2957	12.02	3046	12.38	3107
	22	9.63	2705	10.47	2847	11.31	2989	11.87	3079	12.23	3141
	23	9.52	2734	10.34	2878	11.17	3022	11.73	3113	12.08	3175
	24	9.40	2765	10.22	2910	11.04	3056	11.59	3147	11.94	3210
	25	9.29	2795	10.10	2942	10.90	3089	11.45	3182	11.79	3246
	26	9.18	2826	9.98	2974	10.77	3123	11.31	3217	11.65	3281
	27	9.07	2857	9.86	3007	10.64	3158	11.18	3252	11.51	3317
	28	8.96	2888	9.74	3040	10.52	3192	11.04	3288	11.37	3354
	29	8.85	2920	9.62	3074	10.39	3227	10.91	3324	11.24	3391
	30	8.74	2952	9.51	3108	10.27	3263	10.78	3361	11.10	3428

COMBINATION (%)	INDOOR DB(℃)	OUTDOOR WB(℃)									
		0		5		10		15		20	
		Q	INPUT	Q	INPUT	Q	INPUT	Q	INPUT	Q	INPUT
90%	15	10.09	2496	10.96	2628	11.84	2759	12.43	2842	12.81	2899
	16	9.97	2516	10.83	2649	11.70	2781	12.29	2865	12.65	2922
	17	9.85	2537	10.71	2670	11.56	2804	12.14	2888	12.50	2946
	18	9.73	2557	10.58	2692	11.42	2826	12.00	2911	12.36	2969
	19	9.62	2578	10.45	2713	11.29	2849	11.85	2935	12.21	2993
	20	9.52	2599	10.35	2735	11.18	2872	11.74	2958	12.09	3017
	21	9.41	2627	10.23	2765	11.04	2904	11.60	2991	11.94	3051
	22	9.29	2656	10.10	2796	10.91	2936	11.46	3024	11.80	3084
	23	9.18	2685	9.98	2827	10.78	2968	11.32	3057	11.66	3118
	24	9.07	2715	9.86	2858	10.65	3001	11.18	3091	11.52	3152
	25	8.96	2745	9.74	2889	10.52	3034	11.05	3125	11.38	3187
	26	8.86	2775	9.63	2921	10.40	3067	10.92	3159	11.24	3222
	27	8.75	2805	9.51	2953	10.27	3101	10.79	3194	11.11	3258
	28	8.65	2836	9.40	2986	10.15	3135	10.66	3229	10.98	3293
	29	8.54	2867	9.28	3018	10.03	3169	10.53	3264	10.84	3330
	30	8.44	2899	9.17	3052	9.91	3204	10.40	3300	10.71	3366

COMBINATION (%)	INDOOR DB(℃)	OUTDOOR WB(℃)									
		15	20	-15	-10	-5	0	5	10	15	20
		Q	INPUT	Q	INPUT	Q	INPUT	Q	INPUT	Q	INPUT
80%	15	9.78	2471	10.64	2601	11.49	2731	12.06	2813	12.42	2870
	16	9.67	2491	10.51	2622	11.35	2753	11.92	2836	12.27	2893
	17	9.55	2511	10.38	2644	11.22	2776	11.78	2859	12.13	2916
	18	9.44	2532	10.26	2665	11.08	2798	11.64	2882	11.99	2940
	19	9.33	2552	10.14	2686	10.95	2821	11.50	2905	11.84	2963
	20	9.24	2573	10.04	2708	10.84	2843	11.38	2929	11.73	2987
	21	9.13	2601	9.92	2738	10.71	2875	11.25	2961	11.59	3020
	22	9.02	2629	9.80	2768	10.58	2906	11.11	2993	11.45	3053
	23	8.91	2658	9.68	2798	10.46	2938	10.98	3026	11.31	3087
	24	8.80	2688	9.57	2829	10.33	2971	10.85	3060	11.17	3121
	25	8.69	2717	9.45	2860	10.21	3003	10.72	3093	11.04	3155
	26	8.59	2747	9.34	2892	10.08	3036	10.59	3127	10.91	3190
	27	8.49	2777	9.23	2924	9.96	3070	10.46	3162	10.78	3225
	28	8.39	2808	9.11	2956	9.84	3103	10.34	3197	10.65	3260
	29	8.29	2839	9.01	2988	9.73	3138	10.21	3232	10.52	3296
	30	8.19	2870	8.90	3021	9.61	3172	10.09	3267	10.39	3333

4.2 Piping length correction factor

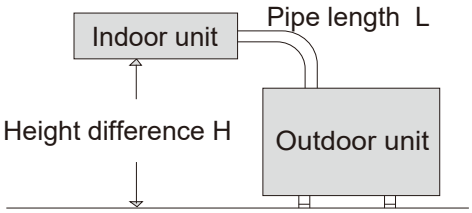

The correction factor is based on the equivalent piping length in meters (EL) and the height between outdoor and indoor units in meters (H).
H:
Height difference between indoor unit and outdoor unit (m).

• H>0: Position of outdoor unit is higher than that of the indoor unit (m).

• H<0: Position of outdoor unit is lower than that of the indoor unit (m).

L:

Actual one-way piping length between indoor unit and outdoor unit (m).

EL: Equivalent one-way piping length between indoor unit and outdoor unit (m).

Equivalent length of

Diameter tube (liquid/gas), мм	Turn of 90° Elbow. L, м	Oil trap – L, м
6,35	0,10	0,70
9,53	0,18	1,30
12,70	0,20	1,50
15,88	0,25	2,00
19,05	0,35	2,40
22,23	0,40	3,00

Cooling

Series	EL / Model	10	15	20	25	30	40	45	50	55	60	65	70	75	80
Up to 2 IDUs	14K~18K	1.00	0.96	0.92	0.88	0.85	--	--	--	--	--	--	--	--	--
Up to 3 IDUs	18K	1.00	0.96	0.95	0.93	0.91	0.87	0.86	--	--	--	--	--	--	--
	24K	1.00	1.00	0.98	0.96	0.94	0.93	0.92	0.90	--	--	--	--	--	--
Up to 4 IDUs	27K	1.00	0.96	0.95	0.93	0.91	0.87	0.86	0.84	0.82	0.80	--	--	--	--
Up to 5 IDUs	36K	1.00	0.96	0.95	0.93	0.91	0.87	0.86	0.84	0.82	0.80	0.78	0.77	0.75	0.73

Heating

Series	EL / Model	10	15	20	25	30	40	45	50	55	60	65	70	75	80
Up to 2 IDUs	14K~18K	1.00	0.96	0.92	0.88	0.85	--	--	--	--	--	--	--	--	--
Up to 3 IDUs	18K	1.00	0.97	0.96	0.94	0.93	0.90	0.89	--	--	--	--	--	--	--
	24K	1.00	1.00	0.98	0.96	0.95	0.92	0.88	0.85	--	--	--	--	--	--
Up to 4 IDUs	27K	1.00	0.97	0.96	0.94	0.91	0.90	0.89	0.87	0.86	0.85	--	--	--	--
Up to 5 IDUs	36K	1.00	0.97	0.96	0.94	0.93	0.90	0.89	0.87	0.86	0.85	0.83	0.82	0.80	0.79

The correction factor of height between indoor unit and outdoor unit

Height difference	5m	10m
Factor	1	0.95

To ensure correct unit selection, consider the farthest indoor unit.

NOTE:

1. Above data is assuming that the height difference between indoor unit and outdoor unit is 0m.
2. Be sure to minimize length of connection pipes to optimize performance. If the outdoor unit is installed higher or lower than the indoor unit, it is necessary to apply height correction factor additionally to length correction factor to calculate cooling.
   If outdoor unit is higher, correction should be applied to cooling capacity, if outdoor unit is lower, correction should be applied to heating capacity.

4.3 Correction Factors according to Defrosting Operation

The heating capacity in the preceding paragraph, excludes the condition of the frost or the defrosting operation period. In consideration of the frost or the defrosting operation, the heating capacity is corrected by the equation below.

Corrected heating capacity = Defrost Correction factor x unit capacity

Up to 2 IDUs/3 IDUs series

Outdoor Temperature(℃WB)	0	7	10	15
Correction Factor	0.81	1.0	1.0	1.0

Up to 4 IDUs/5 IDUs series

Outdoor Temperature(℃WB)	0	3	5	7
Correction Factor	0.85	0.87	0.9	1.0

5. Sound pressure data

Outdoor unit

Model	Up to 2 IDUs Series (14K)

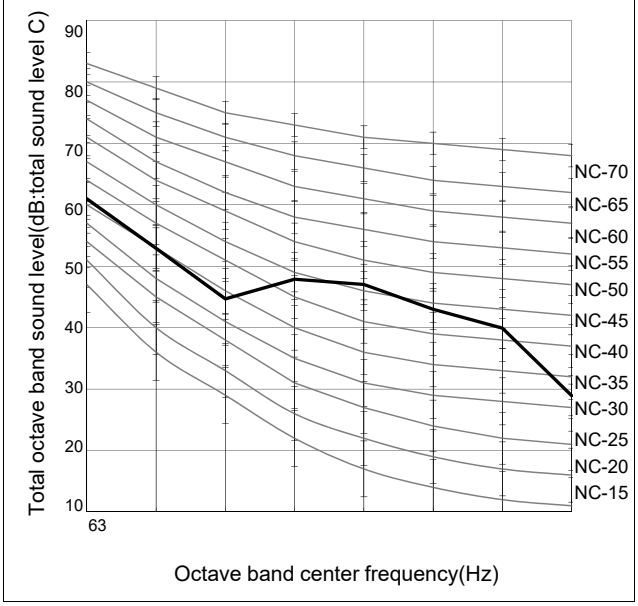

Model	Up to 2 IDUs Series (18K)

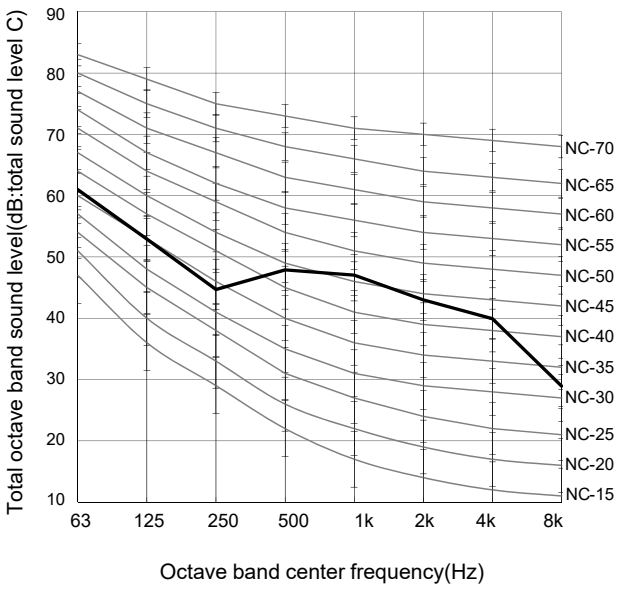

Model	Up to 3 IDUs Series(18K)

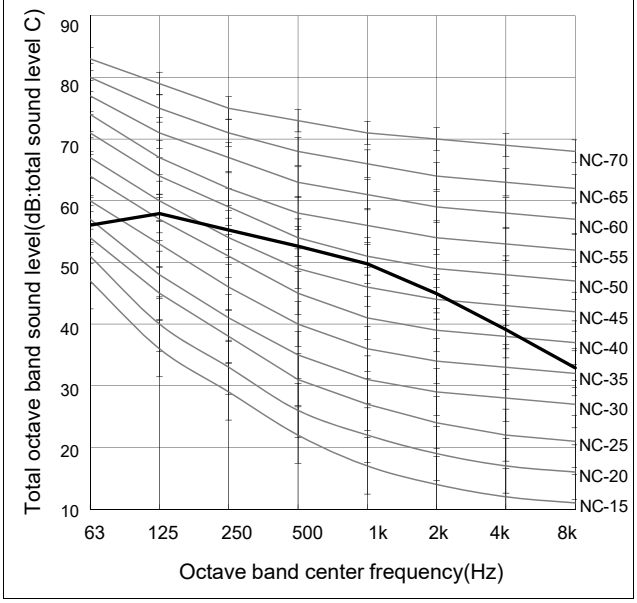

Model	Up to 3 IDUs Series(24K)

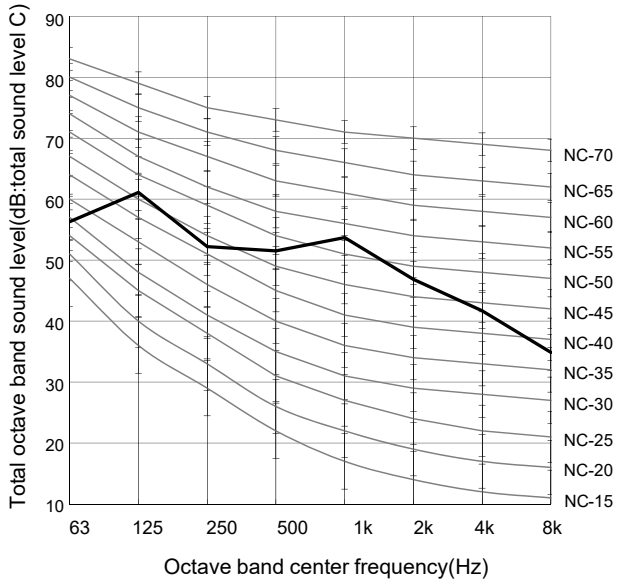

5. SOUND PRESSURE DATA

Model	Up to 4 IDUs Series(27K)

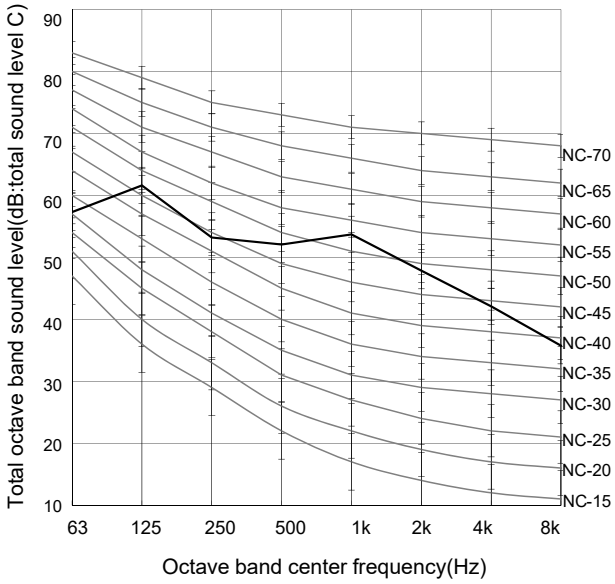

Model	Up to 5 IDUs Series(36K)

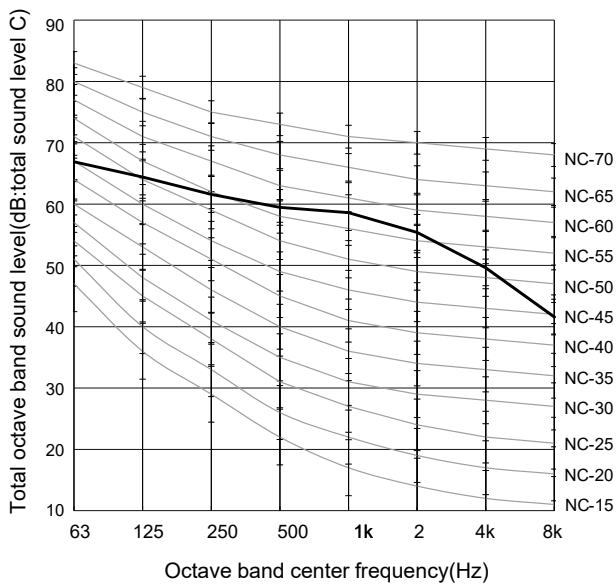

Test condition:

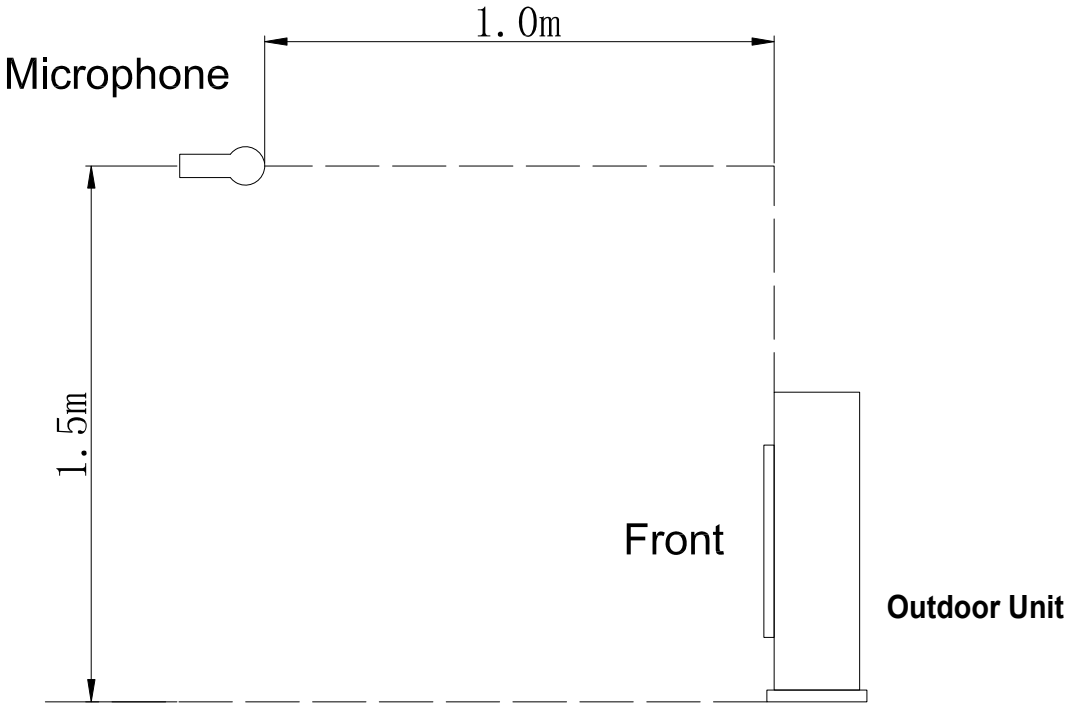

6. Refrigerant cycle

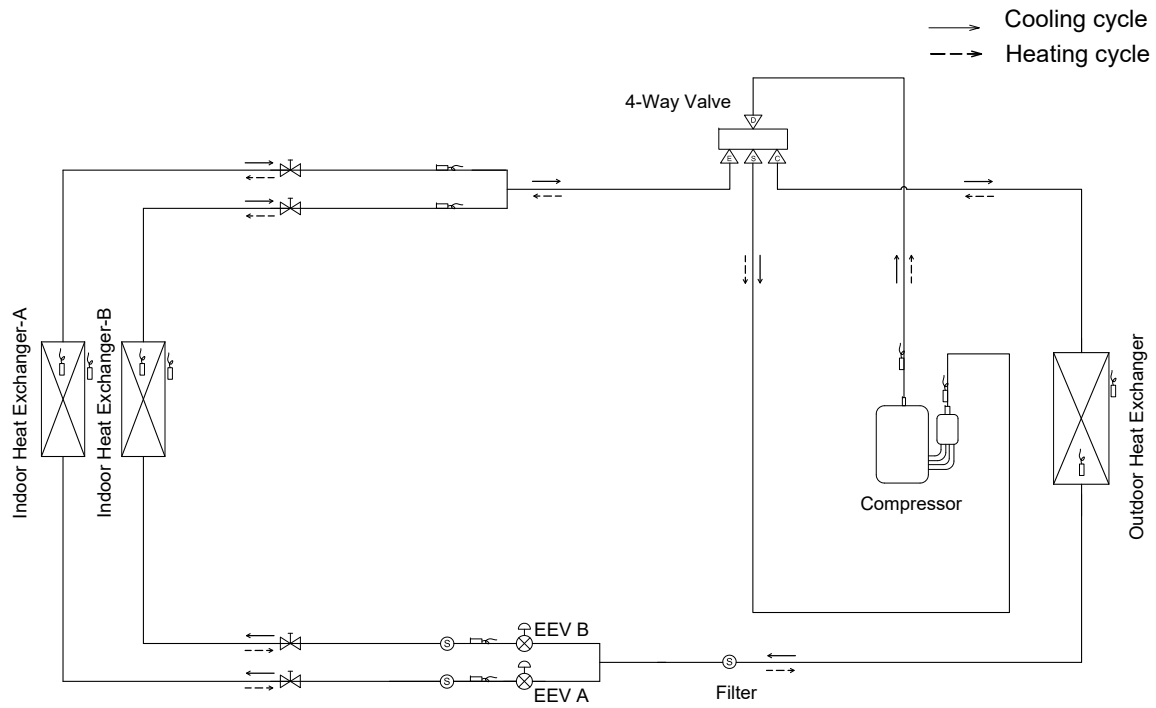

Up to 2 IDUs series(14K/18K)

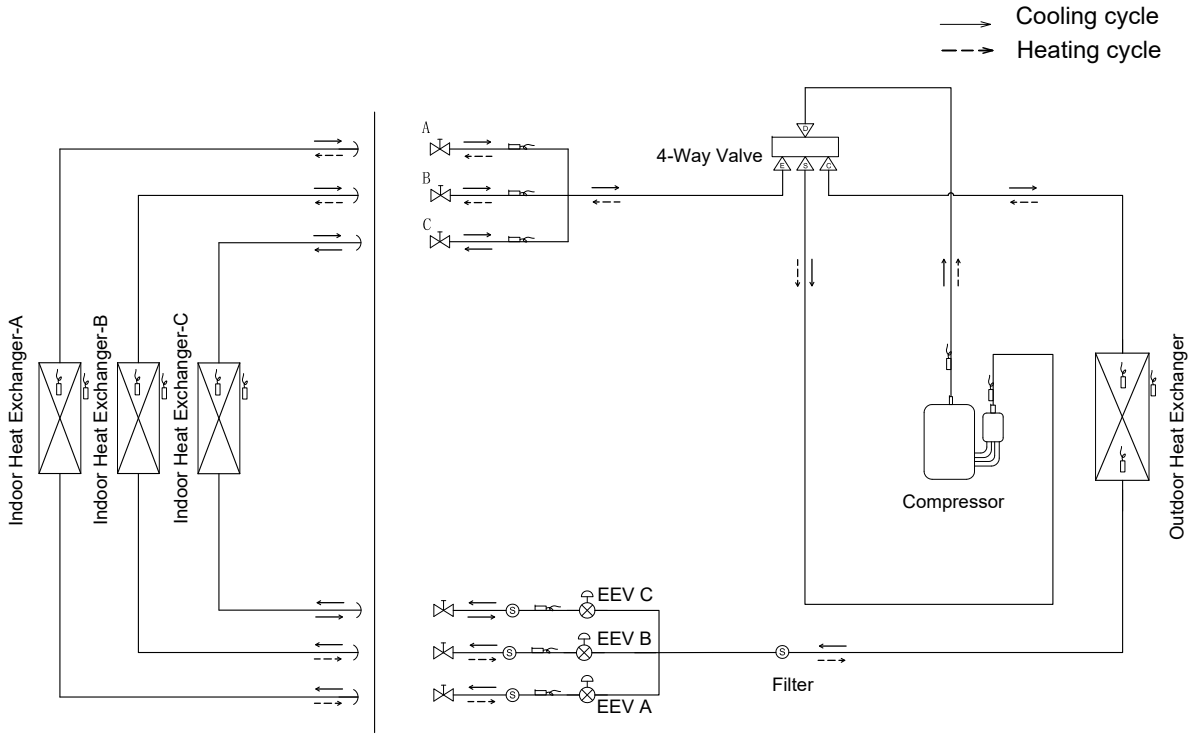

Up to 3 IDUs series(18K/24K)

6. REFRIGERANT CYCLE

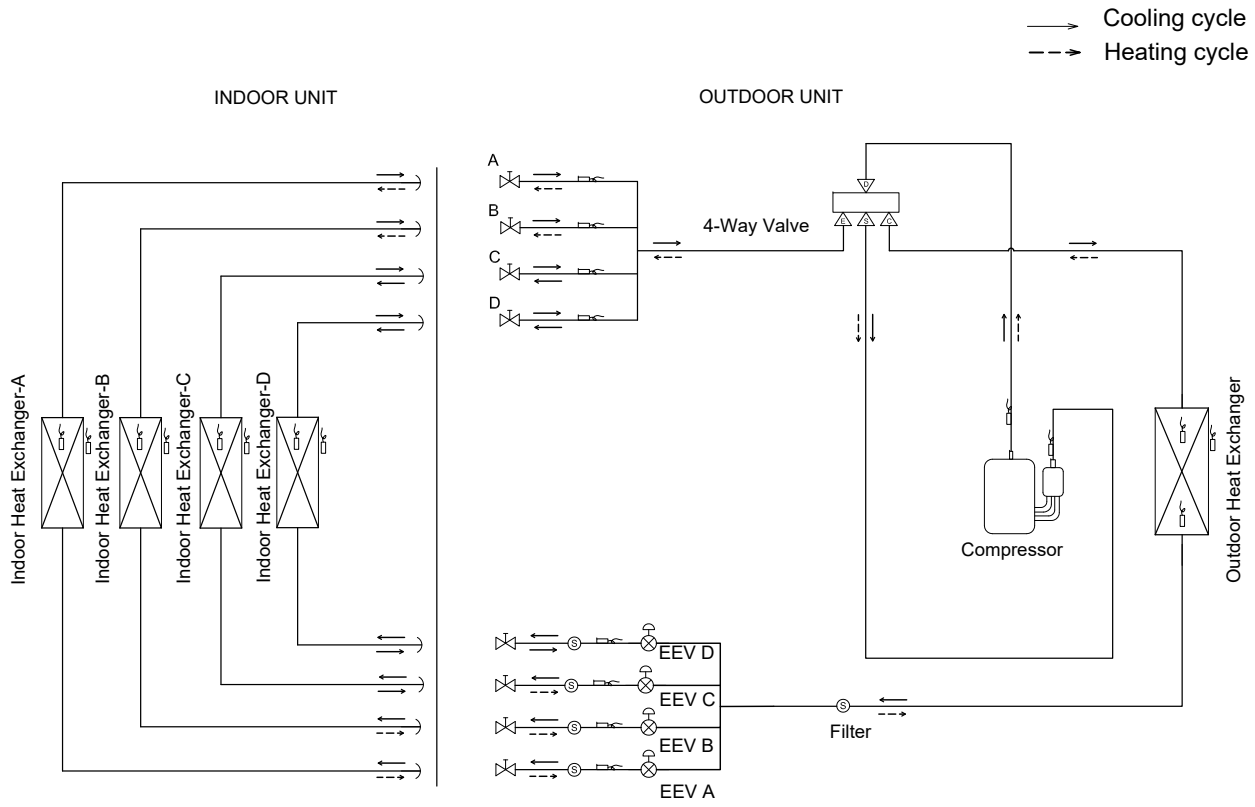

Up to 4 IDUs Series(27K)

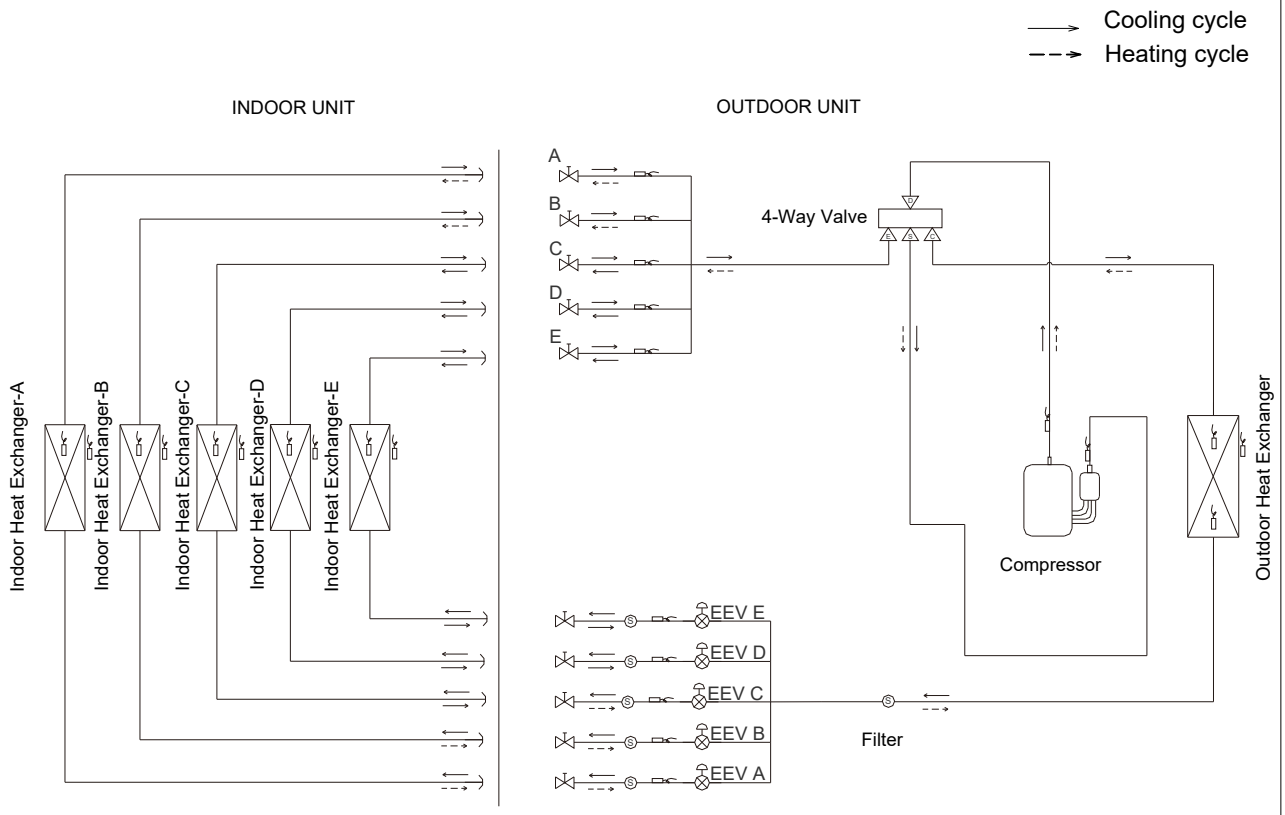

Up to 5 IDUs Series(36K)

7. Wiring diagram

7.1 Electrical wiring diagrams

Up to 2 IDUs Series(14K/18K)

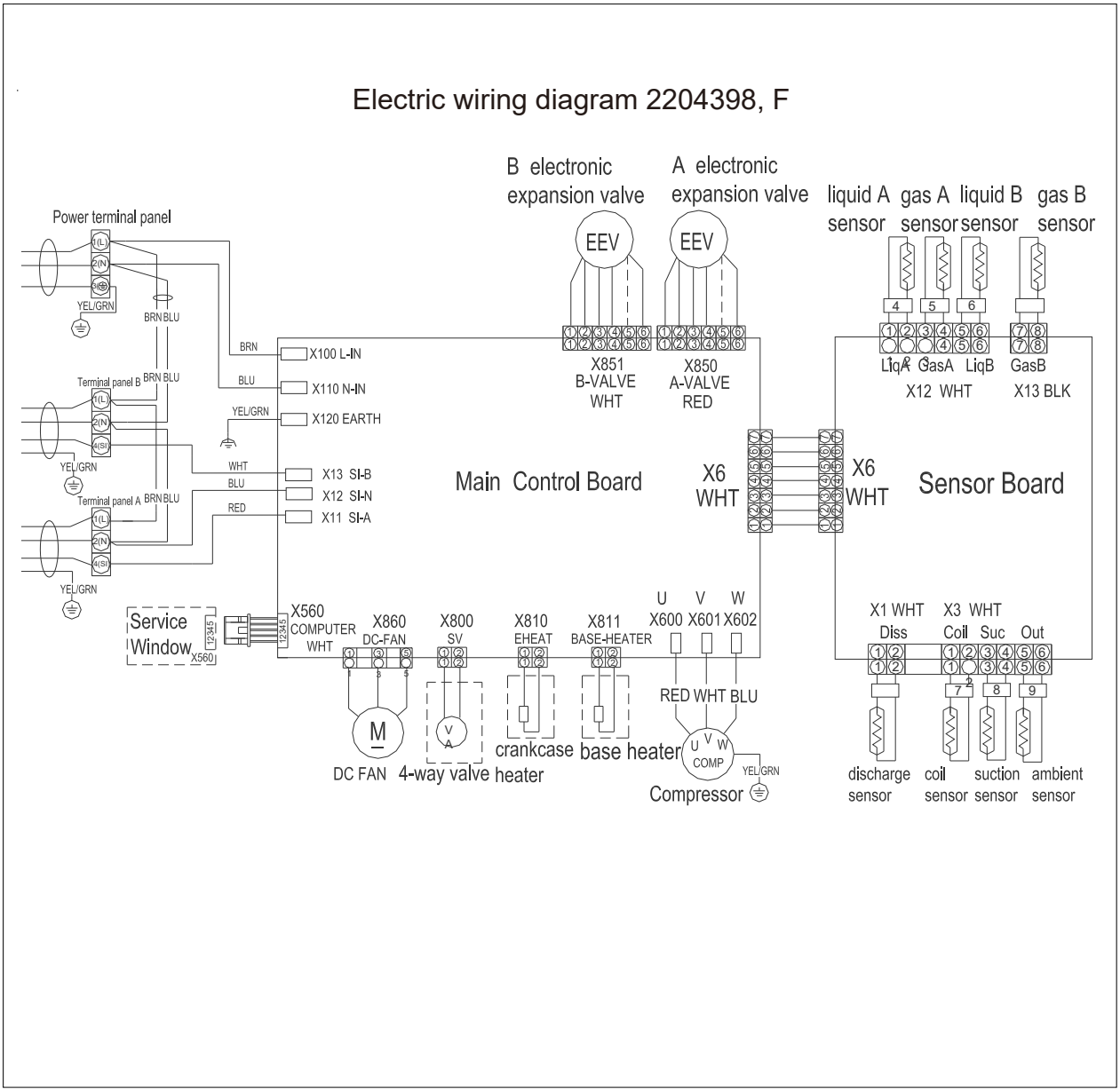

Remark:
Dashed parts are not available in some models.
Details see the table below.

Model	Service Window	4-Way Valve	Crankcase	Base Heater
14K/18K	●	●	●	●

●--available part

7. WIRING DIAGRAM

Up to 3 IDUs Series(18K/24K)

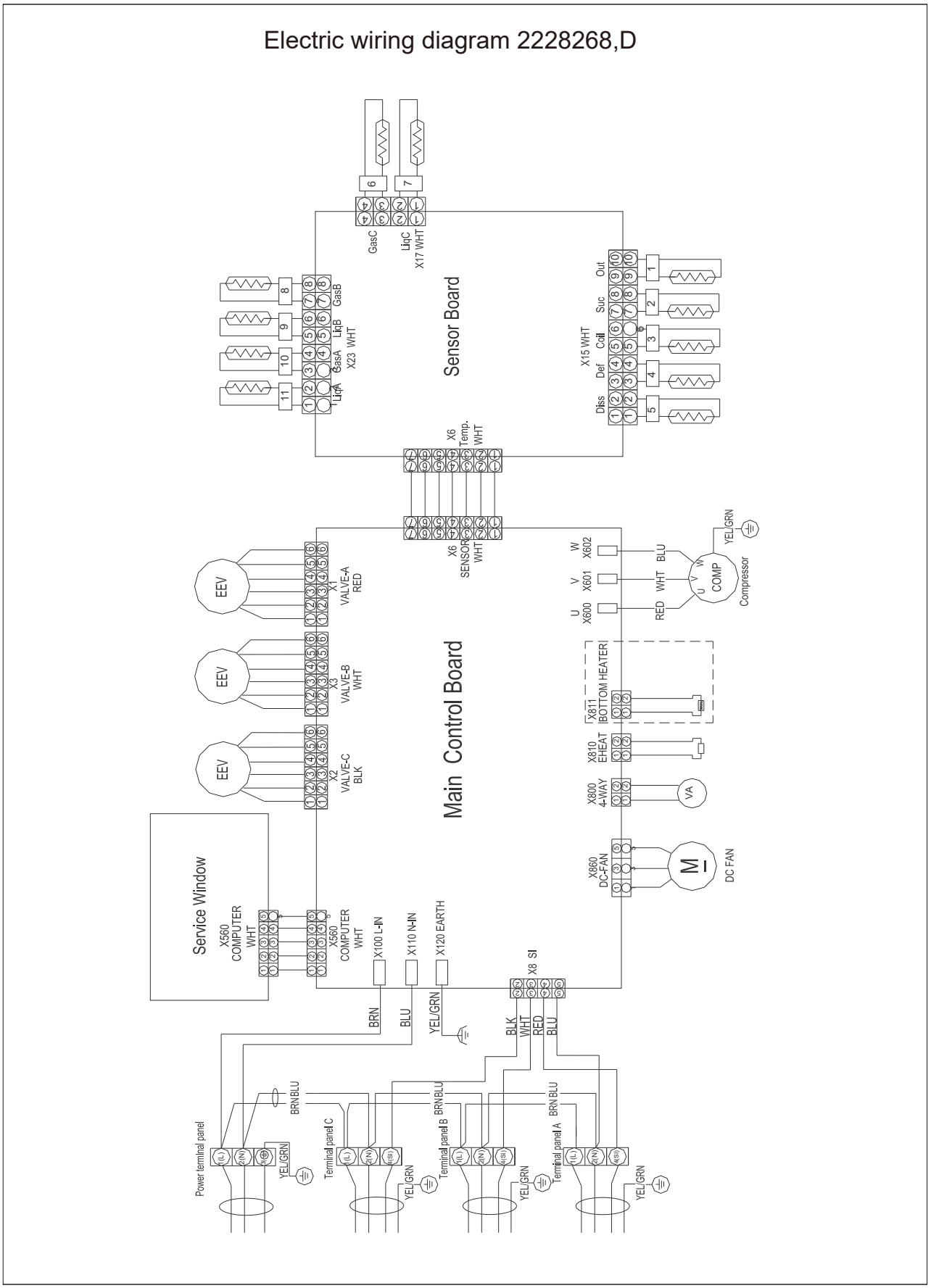

7. WIRING DIAGRAM

Up to 4 IDUs Series(27K)

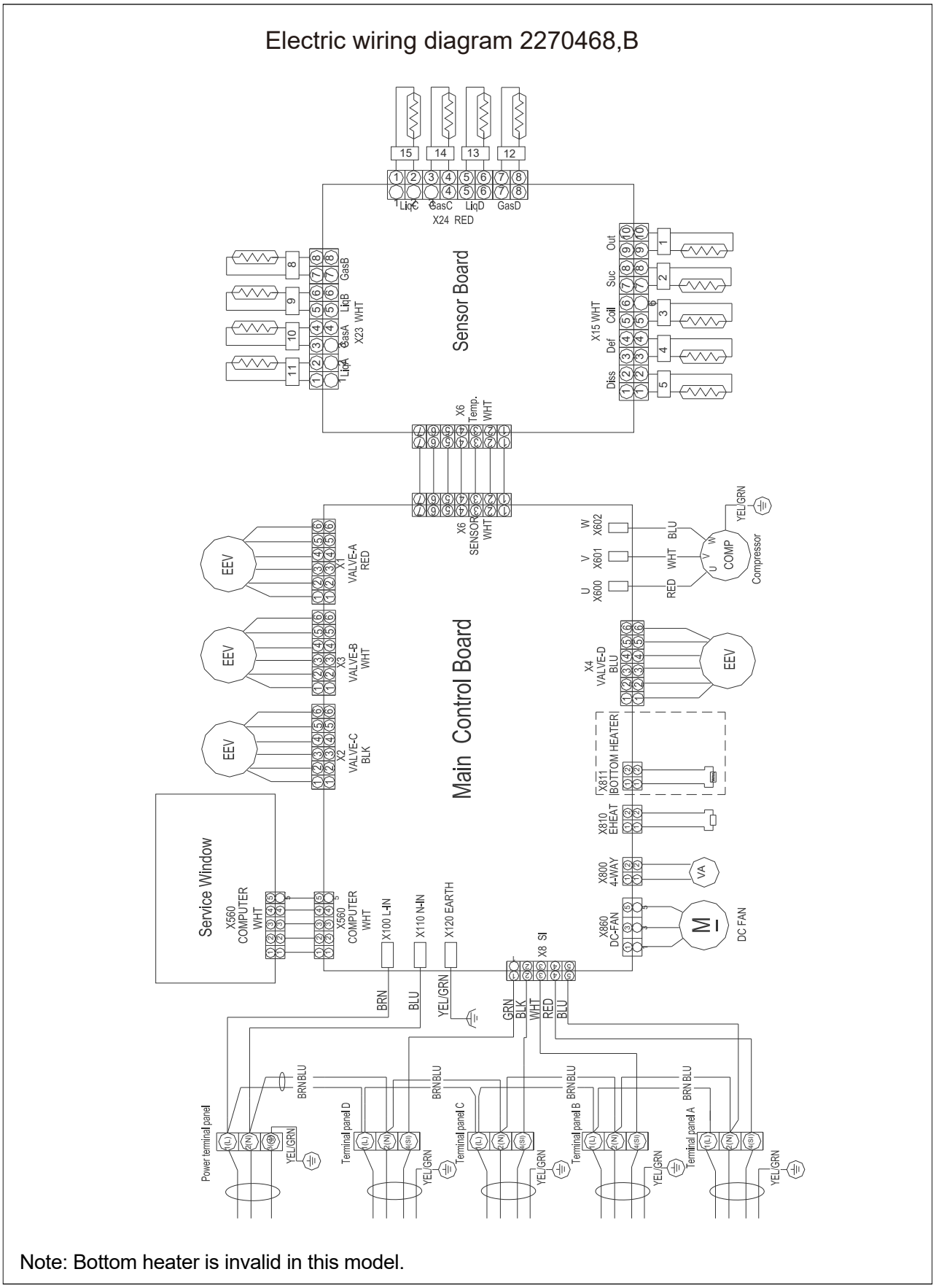

Note: Bottom heater is invalid in this model.

7. WIRING DIAGRAM

Up to 5 IDUs Series(36K)

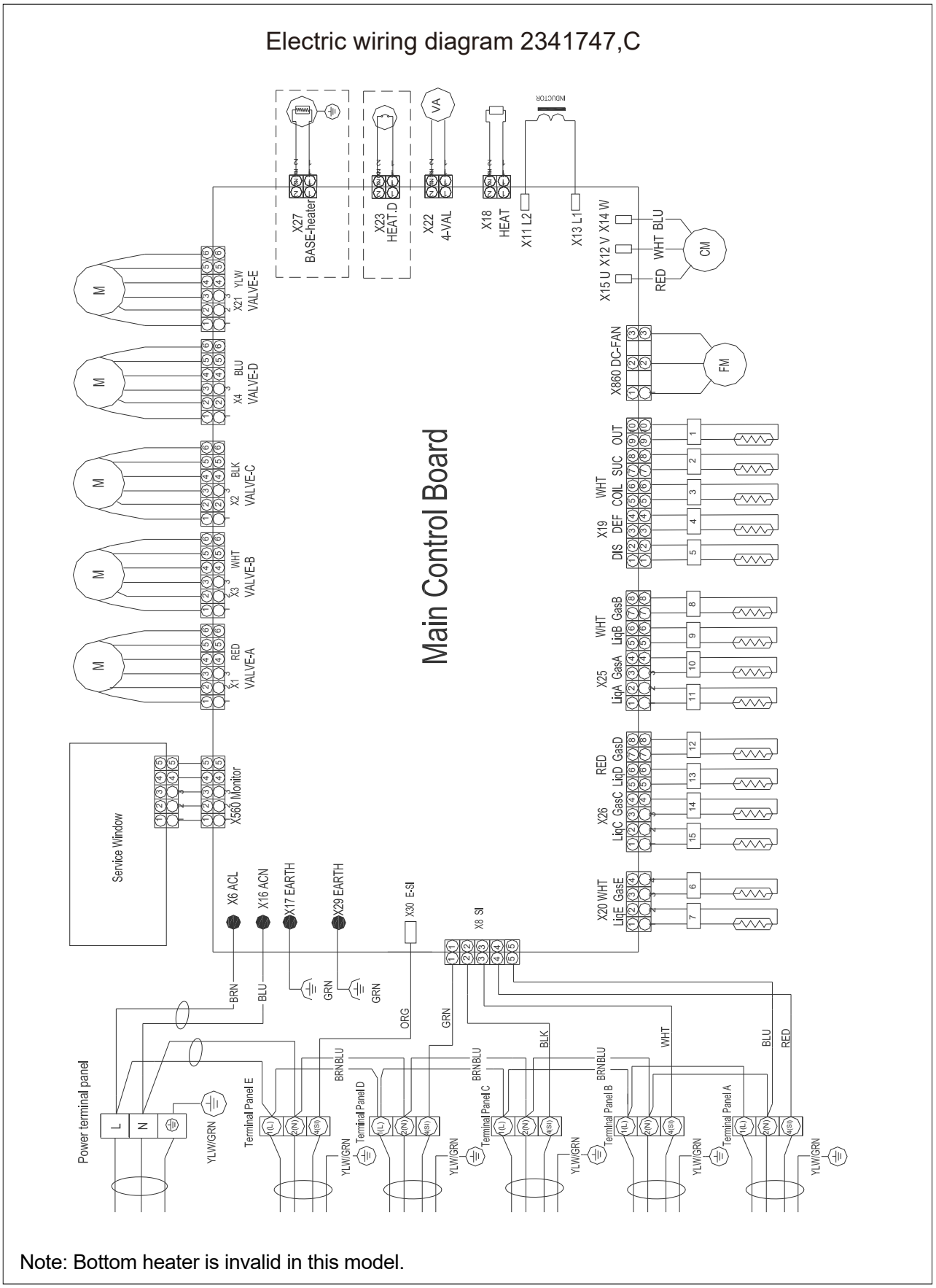

Note: Bottom heater is invalid in this model.

7.2 Control board picture

Up to 2 IDUs Series(14K/18K)

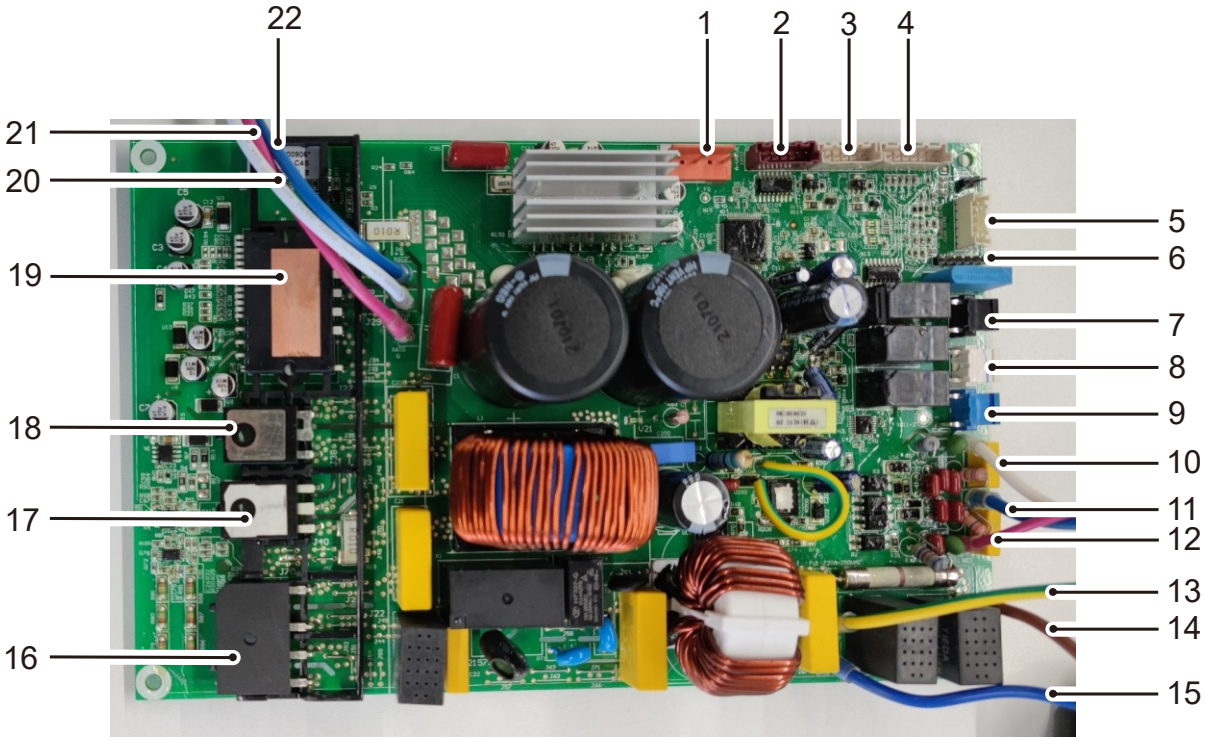

NO.	Description	NO.	Description
1	DC Fan	12	SI-A
2	Electric Expansion Valve-A	13	Earth
3	Electronic Expansion Valve-B	14	AC IN-L
4	To sensor board	15	AC IN-N
5	Checker/Computer	16	Bridge Rectifier
6	EEPROM Program	17	IGBT
7	4-WAY Valve	18	Diode
8	Heater	19	IPM
9	Heater Base	20	Compressor V
10	SI-B	21	Compressor U
11	SI-N	22	Compressor W

7. WIRING DIAGRAM

Sensor board

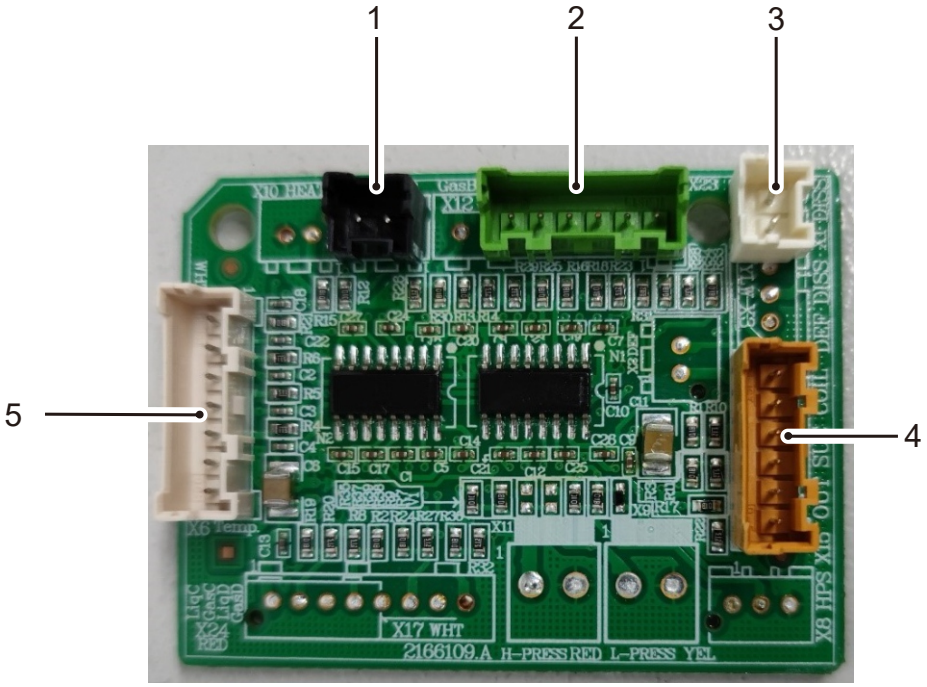

NO.	Description
1	Gas B Sensor
2	Liquid B/ Gas A/Liquid A Sensor
3	Discharge Sensor
4	Coil/Suction/Ambient Temperature Sensor
5	Sensor Signal to Main Board

7. WIRING DIAGRAM

Up to 3 IDUs Series(18K/24K)

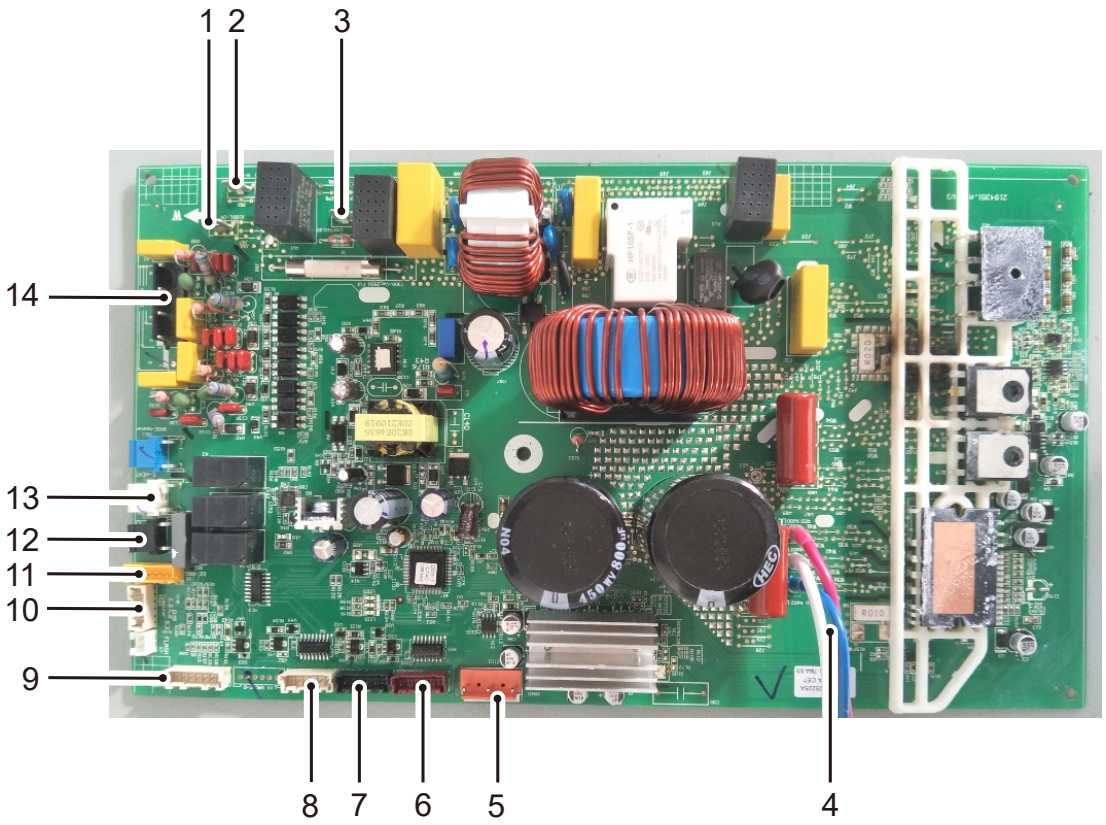

NO.	Description	NO.	Description
1	AC Lin	8	Electronic expansion valve B
2	AC Nin	9	Sensor signal
3	Earth	10	Checker / Computer
4	Compressor	11	EEPROM
5	Fan Motor	12	4-way valve
6	Electronic expansion valve A	13	Electric Heating Belt
7	Electronic expansion valve C	14	Communication Signal to Indoor Unit

7. WIRING DIAGRAM

Sensor board

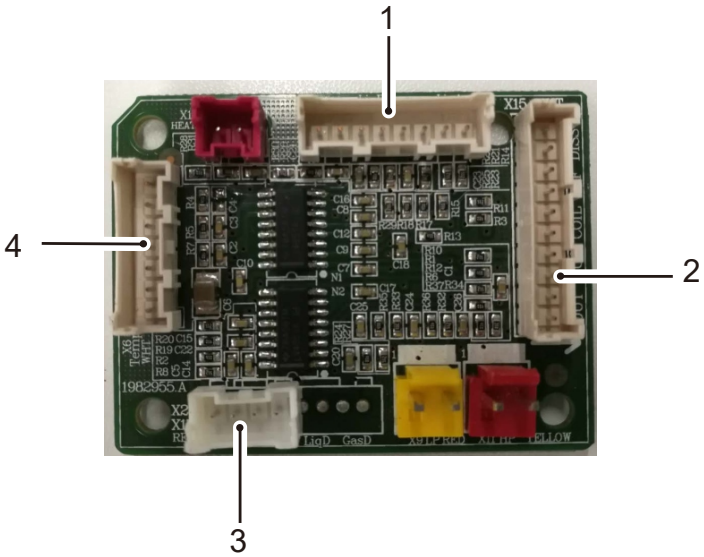

Maintenance board

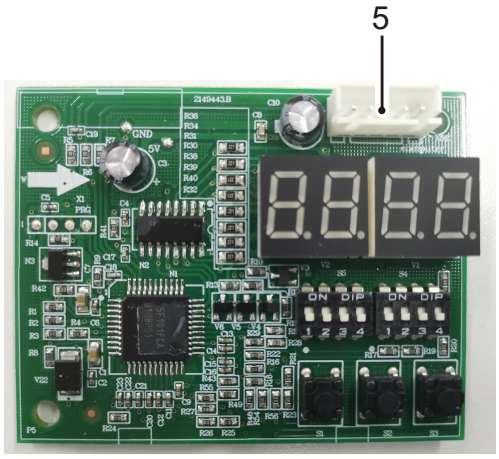

NO.	Description
1	Gas B/Liquid B/Gas A/Liquid A sensor
2	Discharge Sensor/ Defrost Sensor /Coil Sensor /Suction Sensor/ Outdoor Sensor
3	Liquid C/ Gas C sensor
4	Sensor Signal to Main Board
5	Communication signal to main board

7. WIRING DIAGRAM

Up to 4 IDUs Series(27K)

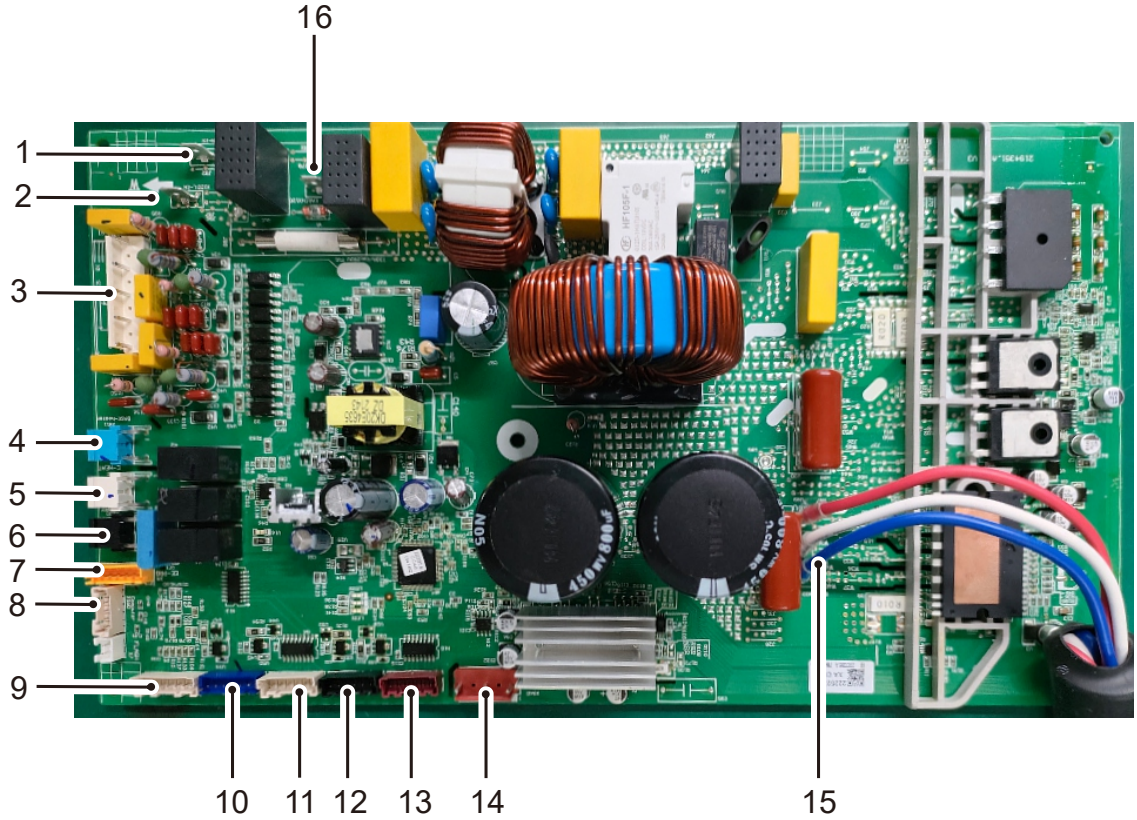

NO.	Description	NO.	Description
1	AC IN-N	9	Sensor signal
2	AC IN-L	10	Electric Expansion Valve-D
3	Communication signal to indoor	11	Electric Expansion Valve-B
4	Base Heater	12	Electric Expansion Valve-C
5	Electric heating belt	13	Electric Expansion Valve-A
6	4-WAY Valve	14	Fan motor
7	EEPROM Program	15	Compressor
8	Checker/Computer	16	Earth

7. WIRING DIAGRAM

Sensor board

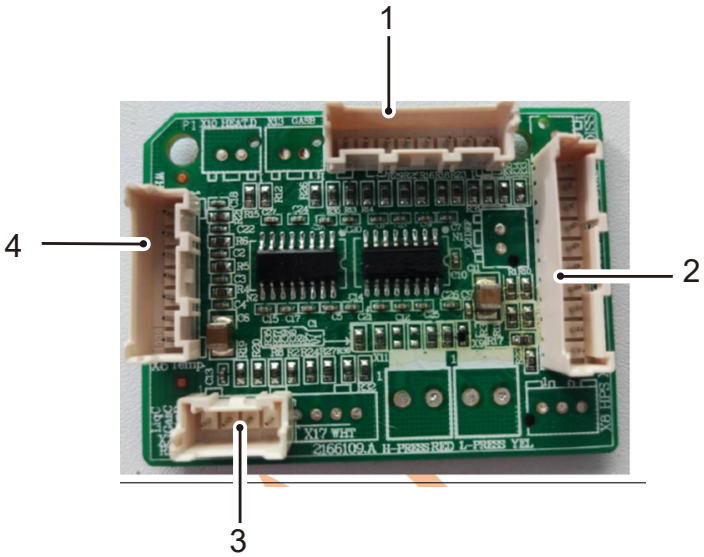

Maintenance board

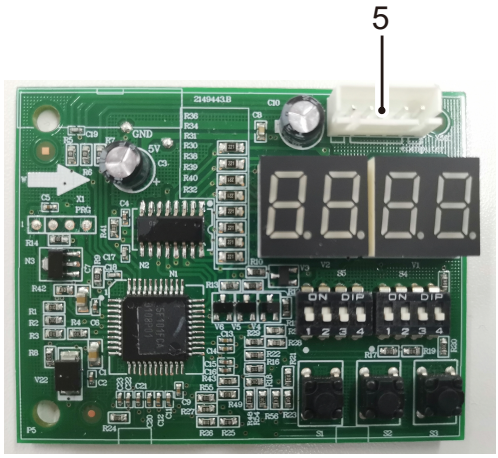

NO.	Description
1	Gas B/Liquid B/Gas A/Liquid A sensor
2	Discharge Sensor/ Defrost Sensor /Coil Sensor /Suction Sensor/ Outdoor Sensor
3	Liquid C/ Gas C sensor/Liquid D/ Gas D sensor
4	Sensor Signal to Main Board
5	Communication signal to main board

7. WIRING DIAGRAM

Up to 5 IDUs Series(36K)

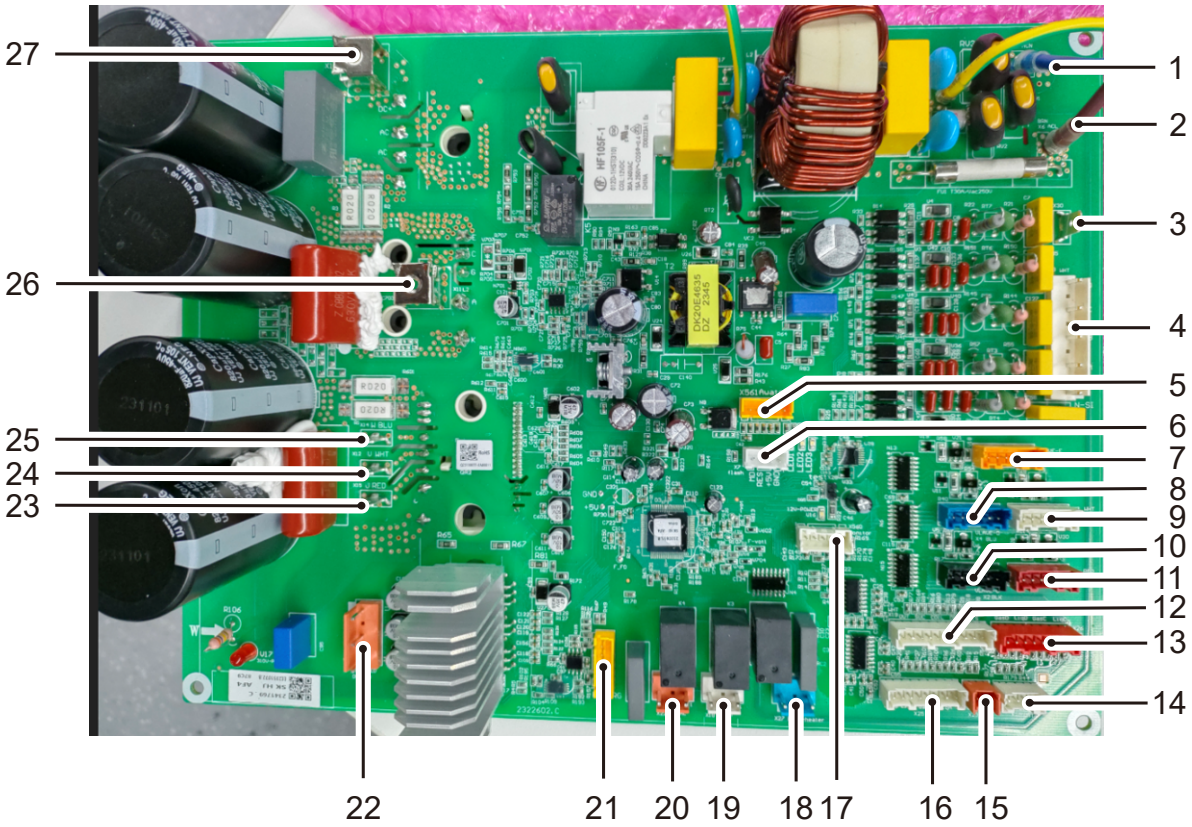

NO.	Description	NO.	Description
1	AC IN-N	14	Gas-E/Liquid-E sensor
2	AC IN-L	15	Overheat protector
3	SI-E	16	Gas-B/Liquid-B/Gas-A/Liquid-A sensor
4	SI-A/SI-B/SI-C/SI-D	17	Checker/Computer
5	Awatcher	18	Base heater
6	Flash	19	Electric heating belt
7	Electric Expansion Valve-E	20	4-WAY valve
8	Electric Expansion Valve-D	21	EEPROM program
9	Electric Expansion Valve-B	22	DC Fan motor
10	Electric Expansion Valve-C	23	Compressor U
11	Electric Expansion Valve-A	24	Compressor V
12	Discharge/defrost/coil/ suction/outdoor sensor	25	Compressor W
		26	Reactor L2
13	Gas-D/Liquid-D/Gas-C/Liquid-C sensor	27	Reactor L1

7. WIRING DIAGRAM

Maintenance board

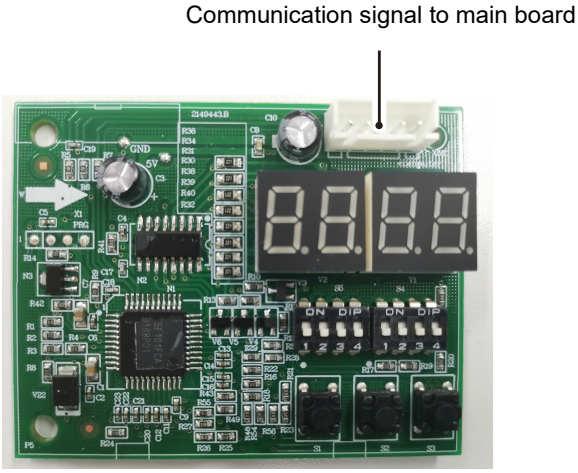

7.3 Common wiring

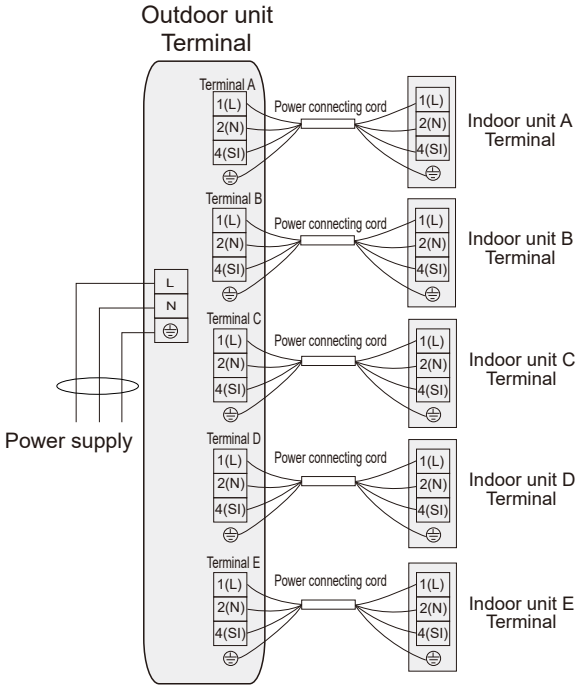

NOTE:
For some indoor units

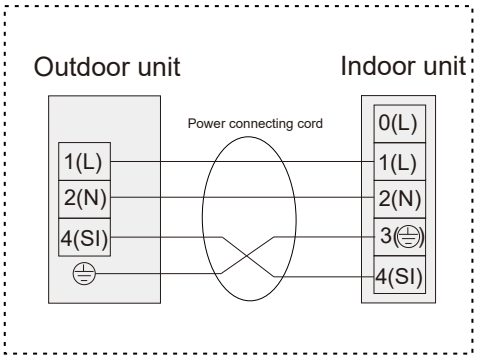

NOTES:
1. For series up to 2 indoor units, there is no INDOOR UNIT C, D and E.
2. For series up to 3 indoor units, there is no INDOOR UNIT D and E.
3. For series up to 4 indoor units, there is no INDOOR UNIT E.

Recommend Wire Size

Series	Model Capacity	Power Supply	ELB		Power Source Cable Size	Transmitting Cable Size	Circuit Breaker(A)
			Nominal Current (A)	Nominal Sensitive Current (mA)	EN60335-1	EN60335-1	
up to 2 indoor units	14K/18K	220-240V ~, 50Hz	16	30	3×2.5mm²	4×1.5mm²	16
up to 3 indoor units	18K	220-240V ~, 50Hz	20	30	3×4.0mm²	4×1.5mm²	20
up to 3 indoor units	24K	220-240V ~, 50Hz	25	30	3×4.0mm²	4×1.5mm²	25
up to 4 indoor units	27K	220-240V ~, 50Hz	25	30	3×4.0mm²	4×1.5mm²	25
up to 5 indoor units	36K	220-240V ~, 50Hz	32	30	3×6.0mm²	4×1.5mm²	32

Max. Running Current (A): REFER TO NAMEPLATE

- Use an ELB (Electric Leakage Breaker).
- Do not operate the system until all the check points have been cleared.

(A) Check to ensure that the insulation resistance is more than 2 Mega Ohm,by measuring the resistance between ground and the terminal of the electrical parts. If not, do not operate the system until the electrical leakage is found and repaired.

(B) Check to ensure that the stop valves of the outdoor unit are fully opened and then start the system.

- Pay attention to the following items while the system is running.

Do not touch any of the parts by hand at the discharge gas side, since the compressor chamber and the pipes at the discharge side are heated higher than 90℃.

7. WIRING DIAGRAM

Note：

(1) Follow local codes and regulations when select field wires, and all the aboveare the minimum wire size.

(2) Use the wires which are not lighter than the ordinary polychloroprene sheathed flexible cord. (Cord designation H07RN-F).

(3) The wire sizes marked with *1 in the above table are selected at the maximum current of the unit according to the National Standard, EN60335-1.

(4) When transmitting cable length is more than 15 meters, a larger wire size should be selected.

(5) Install main switch and ELB for each system separately. Select the high response type ELB that is acted within 0.1second. Recommended capacity to see table above.

(6) In the case that power cables are connected in series, add each unit maximum current and select wires below.

Selection According to EN60335-1

Current i(A)	Wire Size (mm^2)
i≤6	1
6＜i≤10	1.5
10＜i≤16	2.5
16＜i≤25	4
25＜i≤32	6
32＜i≤40	6
40＜i≤63	10
63＜i	*

*In the case that current exceeds 63A, do not connect cables in series.

8. Field setting

8.1 DIP setting

DIP Switch Setting of Outdoor Unit(24K/27K)

TURN ON all power sources before setting.

Mark of "■" indicates the position of DIP switches.

S4 Dip switch setting		S5 Dip switch setting	
Factory setting		Factory setting	
Pump Down Switch		Silence mode	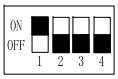
Forced defrosting	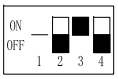	Cooling Only	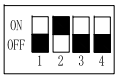

1. Force defrosting mode

By default setting is OFF.

OFF -- Automatic defrosting mode

ON ---- Manual defrosting mode

Operation is valid when the dial is switched from OFF to ON state.

OPERATION:

When the outdoor unit runs in heating mode, and the dial is switched from OFF to ON, then it will run the manual defrosting mode once.

2. Silence mode

By default setting is OFF.

OFF ----Normal mode.

ON---- Silence mode

Operation is valid when the dial is ON.

Silence mode:

Under the silence mode, the outdoor unit fan will run in medium fan speed at most. Under the silence mode state, if there is high pressure protection, discharge temp. protection or cooling overload protection, then it will not enter silence mode within 30 minutes.

3. Pump down mode

Actions:

The compressor runs with the target frequency, and without any protection when frequency rises; The EEV runs with setting opening; Outdoor unit fan will run with the set fan speed.

Operation procedures:

The thermostat is turned off during the whole process.

Please power off before operation.

Step 1:

Open the wiring cover on the right side of the machine.

Step 2:

Close all the stop valves of the liquid piping with an Allen wrench in a clockwise direction.

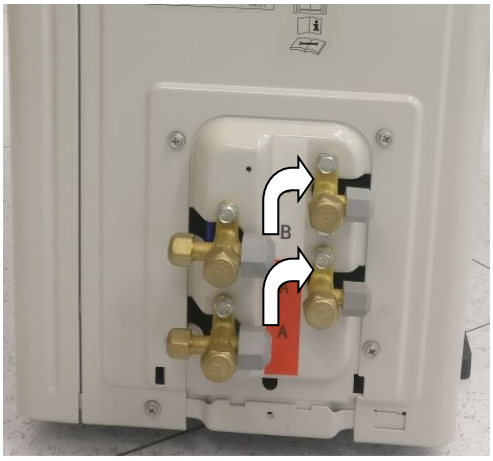

Step 3:
Switch on the machine power.
Step 4:
Switch S4-2 to ON position on the checker board, the outdoor unit starts, and the current frequency value is displayed on the LED digital tube of the checker board.
Step 5:
The frequency value will keep changing until "CLOS" is displayed on the LED digital tube of the checker board, then please check whether the liquid stop valve is closed.

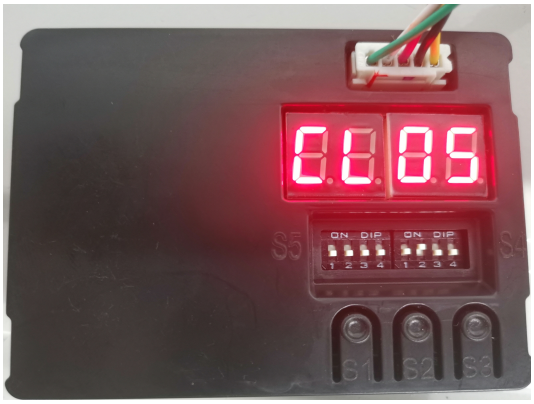

Step 6:
When "GOOD" is displayed on the LED digital tube of the checker board, please close all the stop valves of the gas piping with an Allen wrench in a clockwise direction within 10s.

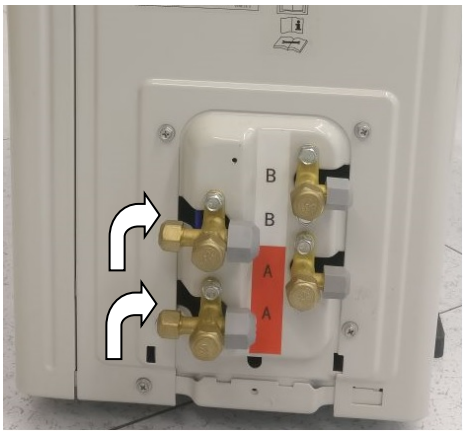

Step 7:
Cut off machine power and the procedure for recovering refrigerant is finished.

4. Cooling only mode

By default setting is OFF.
OFF ----Cooling only mode is invalid.
ON---- Cooling only mode
Operation is valid when dial is switched from OFF to ON state before power on.
Cooling only mode
Heating mode is invalid during this mode.

8.2 Running Parameter Query

For up to 3 IDUs/ up to 4 IDUs/ up to 5 IDUs series, outdoor running parameters can be checked by 7 segment display.

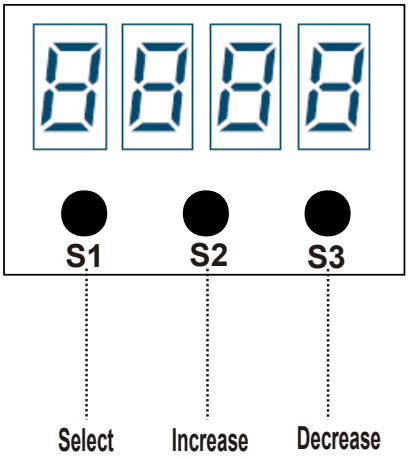

There are 3 buttons on the digital display board:

1) Select button: Select to display outdoor/indoor unit parameter.
"P." -- Parameter of outdoor unit
"A." -- Parameter of indoor unit A
"b." -- Parameter of indoor unit B
"C."-- Parameter of indoor unit C
"d." -- Parameter of indoor unit D
"E." -- Parameter of indoor unit E

2) INCREASE button: Each time it is pressed, the number rises by 1.

3) DECREASE button: Each time it is pressed, the number lowers by 1.

The parameter content will automatically display after the parameter code is selected for 3s.

Parameters can be checked as the table below.

Parameter Code	Descriptions	Parameter Code	Descriptions
P.0	Fault codes	A.1	Unit A fault codes
P.1	Compressor actual frequency	A.2	Unit A valve actual opening
P.2	Compressor driving frequency	A.4	Unit A liquid pipe temperature
P.4	Compressor target frequency	A.5	Unit A gas pipe temperature
P.5	Compressor exhaust temperature	A.6	Unit A coil temperature
P.6	Outdoor suction Temperature	A.7	Unit A ambient temperature
P.7	Outdoor ambient temperature	A.8	Unit A set temperature
P.8	Outdoor coil temperature	A.9	Unit A capacity
P.9	Outdoor defrosting temperature	A.10	Unit A set fan speed
P.10	IPM module temperature	A.11	Unit A actual suction overheating (cooling)
P.11	Outdoor capacity requirement	B.1	Unit B fault codes
P.12	IPM fault codes	B.2	Unit B valve actual opening
P.13	Outdoor DC Motor target speed	B.4	Unit B liquid pipe temperature
P.14	AC input current	B.5	Unit B gas pipe temperature
P.15	AC input voltage	B.6	Unit B coil temperature
P.16	DC bus voltage	B.7	Unit B ambient temperature
P.17	Compressor phase current	B.8	Unit B set temperature
P.18	Frequency limit code	B.9	Unit B capacity
P.20	Target suction overheating	B.10	Unit B set fan speed
P.21	Target exhaust overheaingt	B.11	Unit B actual suction overheating (cooling)
P.22	Actual suction overheating (heating)		
P.23	Actual exhaust overheating (heating)		

Parameter Code	Descriptions	Parameter Code	Descriptions
C.1	Unit C fault codes	E.1	Unit E fault codes
C.2	Unit C valve actual opening	E.2	Unit E valve actual opening
C.4	Unit C liquid pipe temperature	E.4	Unit E liquid pipe temperature
C.5	Unit C gas pipe temperature	E.5	Unit E gas pipe temperature
C.6	Unit C coil temperature	E.6	Unit E coil temperature
C.7	Unit C ambient temperature	E.7	Unit E ambient temperature
C.8	Unit C set temperature	E.8	Unit E set temperature
C.9	Unit C capacity	E.9	Unit E capacity
C.10	Unit C set fan speed	E.10	Unit E set fan speed
C.11	Unit C actual suction overheating (cooling)	E.11	Unit E actual suction overheating (cooling)
D.1	Unit D fault codes		
D.2	Unit D valve actual opening		
D.4	Unit D liquid pipe temperature		
D.5	Unit D gas pipe temperature		
D.6	Unit D coil temperature		
D.7	Unit D ambient temperature		
D.8	Unit D set temperature		
D.9	Unit D capacity		
D.10	Unit D set fan speed		
D.11	Unit D actual suction overheating (cooling)		

Note： The right is therefore reserved to EE changing without notice.

9. Piping work and refrigerant charge

9.1 MAX. length allowed

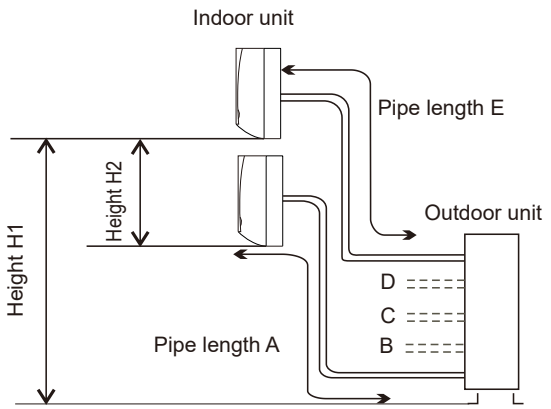

Item \ Model		Up to 2 indoor units	Up to 2 indoor units	Up to 3 indoor units		Up to 4 indoor units	Up to 5 indoor units
		14K	/18K	18K	24K	27K	36K
Piping to each indoor unit (A/B/C/D/E)**	m	≤30	≤40	≤40	≤40	≤40	≤40
Total length of piping between all units**	m	A+B≤60	A+B≤80	A+B+C≤90	A+B+C≤100	A+B+C+D≤110	A+B+C+D+E≤120
Max height between indoor unit and outdoor unit (H1)	m	≤10					
Max height between indoor units (H2)	m	≤5					

**- equivalent length of pipings

9.2 Oil trap

When the indoor unit is lower than outdoor unit and the height difference is larger than 5m, set an oil trap every 5m (height difference) on suction piping.

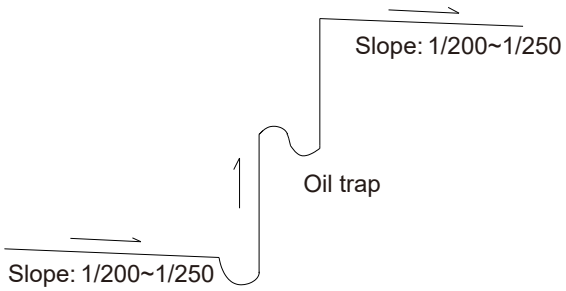

NOTE:

1) To avoid storing too much oil in the oil trap, the oil trap should be as short as possible.
2) The horizontal piping should slope down along the refrigerant flow direction, to bring the oil back to compressor, the slope is about 1/200 to1/250.
3) In order to ensure better cooling/heating performance, the refrigerant piping should be as short and straight as possible.

9.3 Additional refrigerant charge

Although refrigerant has been charged into this unit, additional refrigerant charge is required according to piping length.

- The additional refrigerant precharge quantity should be determined and charged into the system according to the following procedure.
- Record the additional refrigerant quantity in order to facilitate maintenance and servicing activities.

Refrigerant charge before shipment (W_0 (kg))

W_0 is the outdoor unit refrigerant charge before shipment;

Xg is additional refrigerant the outdoor unit needs according to piping length during installation.

Series	Model	Refrigerant pre-charged before shipment(W0(g))
Up to 2 IDUs	14K	950
	18K	1050
Up to 3 IDUs	18K	1350
	24K	1460
Up to 4 IDUs	27K	1750
Up to 5 IDUs	36K	2200

Additional refrigerant charge

For up to 2 indoor units type:
Additional refrigerant charge =(L-10)×12g/m
For up to 3 indoor units type
Additional refrigerant charge =(L-15)×12g/m
For up to 4 indoor units type
Additional refrigerant charge =(L-20)×12g/m
For up to 5 indoor units type
Additional refrigerant charge =(L-25)×12g/m

10. Installation tools and installation flow chart

10.1 Necessary tools and instrument list for installation

No.	Tool	No.	Tool	No.	Tool	No.	Tool
1	Handsaw	6	Copper Pipe Bender	11	Spanner	16	Leveler
2	Phillips Screwdriver	7	Manual Water Pump	12	Charging Cylinder	17	Clamper for Solder-less Terminals
3	Vacuum Pump	8	Pipe Cutter	13	Gauge Manifold	18	Hoist (for Indoor Unit)
4	Refrigerant Gas Hose	9	Brazing Kit	14	Cutter for Wires	19	Ammeter
5	Megohmmeter	10	Hexagon Wrench	15	Gas Leak Detector	20	Voltage Meter

Use specified tools and measuring instruments only for the new refrigerant.

✧: Interchangeability is available with R410A ●: Only for Refrigerant R32

×: Prohibited ✦: Only for Refrigerant R22

Measuring Instrument and Tool for R410A		R32	R22	Reason of Non-Interchangeability and Attention (*: Strictly Required)	Use
Refrigerant Pipe	Pipe Cutter Chamfering Reamer	✧	✧	-	Cutting Pipe Removing Burrs
	Flaring Tool	✧	✧	* The flaring tools for R32 are applicable to R22/R410A. * If using flaring tube, make dimension of tube larger for R410A. * In case of material 1/2H, flaring is not available.	Flaring for Tubes
	Pipe Bender	✧	✧	* In case of material 1/2H, bending is not available. Use elbow for bend and braze.	Bending
	Expanding Tool	✧	✧	* In case of material 1/2H, expanding of tube is not available. Use socket for connecting tube.	Expanding Tubes
	Torque Wrench	✧	×	* For ϕ1/2, ϕ5/8, spanner size is up 2mm.	Connection of Flare Nut
		✧	✧	* For ϕ1/4, ϕ3/8, ϕ3/4, spanner size is the same.	
	Brazing Tool	✧	✧	* Perform correct brazing work.	Brazing for Tubes
	Nitrogen Gas	✧	✧	* Strict Control against Contamin (Blow nitrogen during brazing.)	Prevention from Oxidation during
	Lubrication Oil (for Flare Surface)	●	✦	* Use a synthetic oil which is equivalent to the oil used in the refrigeration cycle. * Synthetic oil absorbs moisture quickly.	Prevention from Oxidation during Brazing
Vacuum Drying& Refrigerant Charge	Refrigerant Cylinder	×	×	* Check refrigerant cylinder color. * Liquid refrigerant charging is required regarding zeotoropic refrigerant. * Use the weight scale.	Refrigerant Charging
	Vacuum Pump	✧	✧	* The current ones are applicable. However, it is required to mount a vacuum pump adapter which can prevent from reverse flow when a vacuum pump stops, resulting in no reverse oil flow.	Vacuum Pumping
	Adapter for Vacuum Pump	✧	✦		
	Manifold Valve	✧	✦	* No interchangeability is available due to higher pressures when compared with R22. * Do not use current ones to the different refrigerant. If used, mineral oil will flow into the cycle and cause sludges, resulting in clogging or compressor failure. * Connection diameter is different; R32/R410A: UNF1/2, R22: UNF7/16.	Vacuum Pumping, Vacuum Holding, Refrigerant Charging and Check of Pressures
	Charging Hose	✧	×		
	Weight Scale	✧	✧		Measuring Instrument for Refrigerant Charging
	Refrigerant Gas Leakage Detector	×	×	* The current gas leakage detector (R22) is not applicable due to different detecting method.	Gas Leakage Check

10.2 Installation flow chart

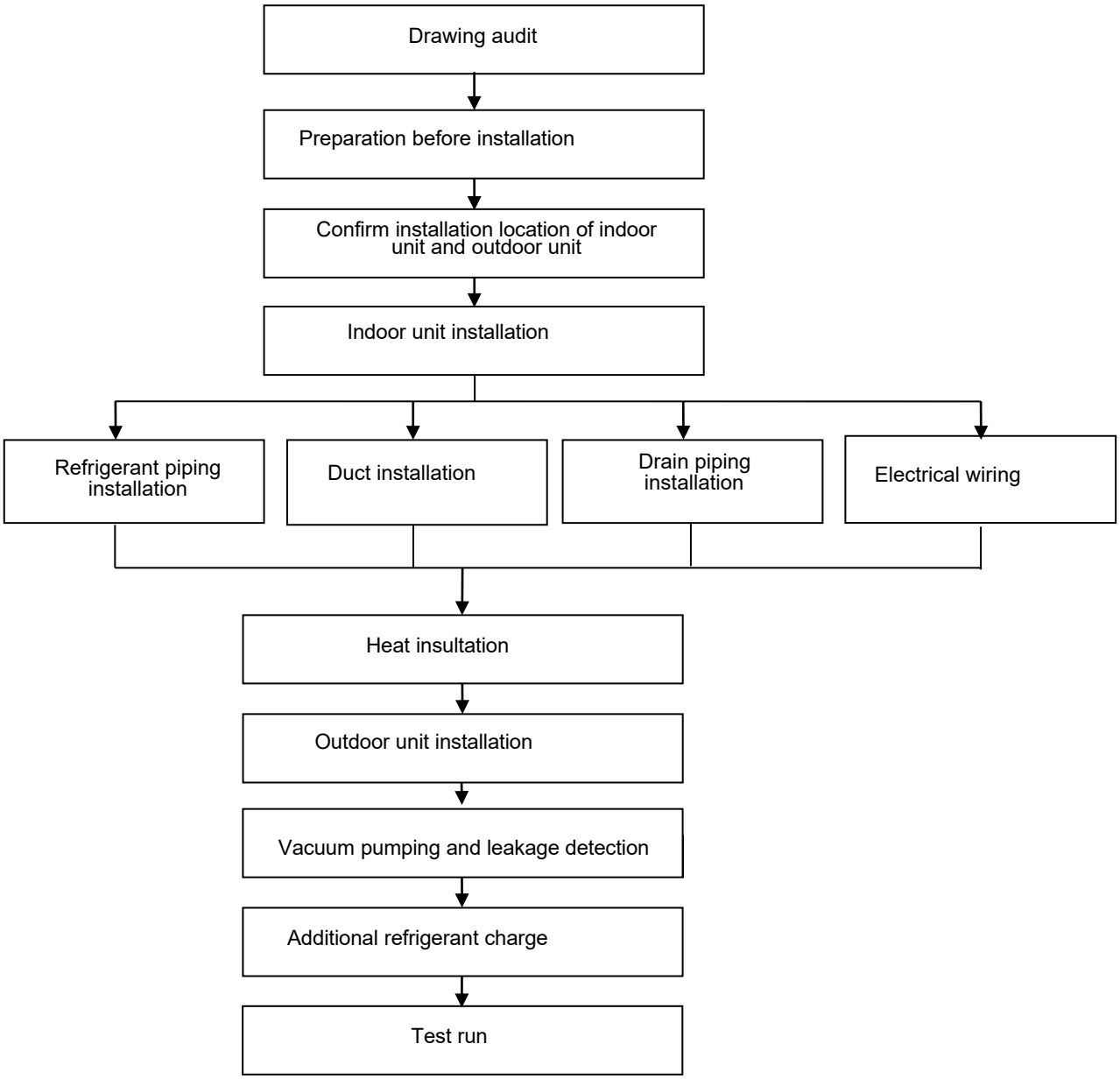

Note: this flow is only for reference; detailed see installation manual section.

11. Control mode

1) Cooling Anti-freeze Protection

To prevent freezing caused by too low temperature of indoor evaporator, the air conditioner will implement real-time detection over the indoor coil temperature. If the indoor coil temperature is too low, the compressor will be prohibited from increasing the frequency or decrease the frequency even shut down automatically.

2) Heating Overload Protection

To prevent system overload caused by excessive pressure in heating operation, the machine will implement real-time detection over the indoor fan-coil temperature:

If the indoor coil temperature grows higher, the compressor will be prohibited from increasing the frequency; If the temperature continues to rise, the compressor will decrease the frequency; If the indoor coil temperature is too high, the compressor will stop working immediately. The compressor then will reboot after the indoor coil temperature reduces.

3) Cooling Overload Protection

To prevent system overload due to excessive pressure during cooling operation, the machine will implement real-time detection over the outdoor condenser coil temperature: If the outdoor coil temperature grows higher, the compressor will be prohibited from increasing the frequency; If the temperature continues to rise, the compressor will decrease the frequency; If the outdoor fan-coil temperature is too high, then the compressor will stop working immediately. The compressor will reboot after the outdoor coil temperature reduces.

4) Discharge Temperature Protection

To prevent working conditions of compressor from deteriorating due to high discharge temperature, the machine will implement real-time detection over the discharge temperature.

If the discharge temperature grows higher, the compressor will be prohibited from increasing the frequency; if the temperature continues to rise, the compressor will decrease the frequency automatically; if the discharge temperature is too high, the compressor will stop working immediately. The compressor will then reboot when the discharge temperature returns to normal condition.

5) Oil-return Control

When the compressor continues to operate at low frequency, there will be an oil return. The compressor increases the frequency, and thus to return the oil in refrigerate system to the compressor.

6) Operation Mode

a. Mode Categories

Air conditioning mode is the operation mode set by users through remote controller, four modes are available: cooling, heating, dehumidification, as well as fan mode.

b. Mode conflict

The operating mode of outdoor unit is decided by the operating mode of the indoor unit firstly booted. Indoor unit subsequently booted will firstly determine whether it's own mode is in conflict with the outdoor mode. If so, the indoor unit will automatically shut down after three beeps; If there is no conflict, the indoor unit will boot normally. The relationship of mode conflict is as follows:

Driven choice / Active mode	Cooling	Dehumidification	Heating	Fan
Cooling	√	√	×	√
Dehumidification	√	√	×	√
Heating	×	×	√	×
Fan	√	√	×	√

√———Mode conflict will not happen

×———Mode conflict will happen

7) Outdoor four-way Valve Control

Four-way valve of the outdoor machine shuts down during cooling but starts during heating. The operation of heating defrosting refers to defrosting operation and, when the heating remote shutdown, the four-way valve disconnects in a few seconds when the compressor stops working.

8) Start-up Protection

To prevent compressor from restart frequently in the condition that system pressure has not been completely balanced, it can't be restarted within 3 minutes.

12. Sensor parameter

1. THE PARAMETER OF OUTDOOR COMPRESSOR DISCHARGE TEMPERATURE SENSOR:
   (R_0=187.25K±6.3%；R_{100}=3.77K±2.5K；B0/100=3979K±1%)
   DR: Deviation Rate
   DR(MIN)%=（Rmin-Rnom）/Rnom*100%
   DR(MAX)%=（Rmax-Rnom）/Rnom*100%

T [℃]	Rmin [KΩ]	Rnom [KΩ]	Rmax [KΩ]	DR(MIN)%	DR(MAX)%
-30	908.2603	985.5274	1065.1210	-7.84	7.47
-29	855.3955	927.6043	1001.9150	-7.78	7.42
-28	805.9244	873.4324	924.8368	-7.73	5.56
-27	759.6097	822.7471	887.5944	-7.67	7.31
-26	716.2320	775.3041	835.9165	-7.62	7.25
-25	675.5881	730.8775	787.5529	-7.56	7.20
-24	637.4902	689.2583	742.2720	-7.51	7.14
-23	601.7645	650.2533	699.8601	-7.46	7.09
-22	568.2499	613.6835	660.1191	-7.40	7.03
-21	536.7970	579.3832	622.8658	-7.35	6.98
-20	507.2676	547.1989	587.9307	-7.30	6.93
-19	497.5332	516.9882	555.1565	-3.76	6.88
-18	453.4748	488.6192	524.3977	-7.19	6.82
-17	428.9819	461.9693	495.5191	-7.14	6.77
-16	405.9517	436.9251	486.3954	-7.09	10.17
-15	384.2888	413.3808	442.9105	-7.04	6.67
-14	363.9047	391.2386	418.9563	-6.99	6.62
-13	344.7169	370.4072	396.4325	-6.94	6.56
-12	326.6497	350.8019	375.2461	-6.88	6.51
-11	309.6286	332.3441	355.3104	-6.83	6.46
-10	293.5903	314.9620	336.5448	-6.79	6.41
-9	278.4719	298.5822	318.3744	-6.74	6.22
-8	264.2156	283.1464	302.2294	-6.69	6.31
-7	250.7678	268.5936	286.5448	-6.64	6.26
-6	238.0783	254.8686	271.7603	-6.59	6.22
-5	226.1003	241.9200	257.8193	-6.54	6.17
-4	214.7903	229.6997	244.6593	-6.49	6.11
-3	204.1073	218.1630	232.2612	-6.44	6.07
-2	194.0135	207.2681	220.5495	-6.39	6.02
-1	184.4732	196.9759	209.4913	-6.35	5.97
0	175.4533	187.2500	199.0468	-6.30	5.93
1	166.8952	178.0255	189.1529	-6.25	5.88
2	158.8023	169.3067	179.8058	-6.20	5.84
3	151.1467	161.0633	170.9724	-6.16	5.80
4	143.9026	153.2667	162.6216	-6.11	5.75
5	137.0455	145.8905	154.7246	-6.06	5.71
6	130.5528	138.9097	147.2544	-6.02	5.67
7	124.4033	132.3011	140.1856	-5.97	5.62
8	118.5769	126.0429	133.4946	-5.92	5.58
9	113.0550	120.1146	127.1591	-5.88	5.54
10	107.8202	114.4973	121.1586	-5.83	5.50
11	102.8560	109.1728	115.4734	-5.79	5.46
12	98.1470	104.1246	110.0855	-5.74	5.41
13	93.6787	99.3367	104.9778	-5.70	5.37
14	89.4378	94.7946	100.1342	-5.65	5.33
15	85.4114	90.4842	95.5398	-5.61	5.29
16	81.5875	86.3926	91.1805	-5.56	5.25
17	77.9551	82.5076	87.0430	-5.52	5.21
18	74.5034	78.8177	83.1150	-5.47	5.17

12. SENSOR PARAMETER

T [℃]	Rmin [KΩ]	Rnom [KΩ]	Rmax [KΩ]	DR(MIN)%	DR(MAX)%
19	71.2227	75.3122	79.3848	-5.43	5.13
20	68.1036	71.9808	75.8414	-5.39	5.09
21	65.1373	68.8141	72.4746	-5.34	5.05
22	62.3155	65.8032	69.2746	-5.30	5.01
23	59.6306	62.9395	66.2324	-5.26	4.97
24	57.0752	60.2152	63.3395	-5.21	4.93
25	54.6424	57.6227	60.5877	-5.17	4.89
26	52.3258	55.1551	57.9695	-5.13	4.85
27	50.1192	52.8058	55.4778	-5.09	4.82
28	48.0168	50.5684	53.1058	-5.05	4.78
29	46.0133	48.4371	50.8472	-5.00	4.74
30	44.1034	46.4046	48.6960	-4.96	4.71
31	42.2825	44.4711	46.6466	-4.92	4.66
32	40.5458	42.6261	44.6937	-4.88	4.63
33	38.8891	40.8668	42.8323	-4.84	4.59
34	37.3084	39.1890	41.0576	-4.80	4.55
35	35.7998	37.5883	39.3653	-4.76	4.51
36	34.3596	36.0609	37.7511	-4.72	4.48
37	32.9844	34.6030	36.2109	-4.68	4.44
38	31.6710	33.2113	34.7412	-4.64	4.40
39	30.4164	31.8823	33.3383	-4.60	4.37
40	29.2176	30.6130	31.9988	-4.56	4.33
41	28.0718	29.4004	30.7197	-4.52	4.29
42	26.9765	28.2417	29.4979	-4.48	4.26
43	25.9293	27.1342	28.3306	-4.44	4.22
44	24.9277	26.0755	27.2150	-4.40	4.19
45	23.9697	25.0632	26.1488	-4.36	4.15
46	23.0530	24.0950	25.1293	-4.32	4.12
47	22.1757	23.1688	24.1545	-4.29	4.08
48	21.3360	22.2826	23.2221	-4.25	4.05
49	20.5321	21.4345	22.3301	-4.21	4.01
50	19.7623	20.6226	21.4766	-4.17	3.98
51	19.0261	19.8468	20.6612	-4.14	3.94
52	18.3211	19.1040	19.8808	-4.10	3.91
53	17.6458	18.3926	19.1338	-4.06	3.87
54	16.9986	17.7113	18.4185	-4.02	3.84
55	16.3784	17.0537	17.7335	-3.96	3.83
56	15.7839	16.4332	17.0774	-3.95	3.77
57	15.2139	15.8338	16.4488	-3.92	3.74
58	14.6673	15.2592	15.8464	-3.88	3.71
59	14.1430	14.7083	15.2690	-3.84	3.67
60	13.6400	14.1799	14.7154	-3.81	3.64
61	13.1573	13.6730	14.1846	-3.77	3.61
62	12.6941	13.1868	13.6756	-3.74	3.57
63	12.2494	12.7202	13.1872	-3.70	3.54
64	11.8224	12.2723	12.7186	-3.67	3.51
65	11.4124	11.8424	12.2690	-3.63	3.48
66	11.0185	11.4295	11.8373	-3.60	3.45
67	10.6401	11.0331	11.4230	-3.56	3.41
68	10.2765	10.6522	11.0251	-3.53	3.38
69	9.9271	10.2863	10.6429	-3.49	3.35
70	9.5912	9.9348	10.2756	-3.46	3.32
71	9.2682	9.5968	9.9231	-3.42	3.29
72	8.9576	9.2720	9.5841	-3.39	3.26
73	8.6589	8.9597	9.2583	-3.36	3.23
74	8.3716	8.6594	8.9451	-3.32	3.19

12. SENSOR PARAMETER

T [℃]	Rmin [KΩ]	Rnom [KΩ]	Rmax [KΩ]	DR(MIN)%	DR(MAX)%
75	8.0951	8.3705	8.6440	-3.29	3.16
76	7.8290	8.0926	8.3544	-3.26	3.13
77	7.5730	7.8252	8.0758	-3.22	3.10
78	7.3264	7.5679	7.8078	-3.19	3.07
79	7.0891	7.3202	7.5499	-3.16	3.04
80	6.8605	7.0818	7.3018	-3.12	3.01
81	6.6403	6.8522	7.0629	-3.09	2.98
82	6.4282	6.6311	6.8329	-3.06	2.95
83	6.2239	6.4182	6.6115	-3.03	2.92
84	6.0269	6.2131	6.3982	-3.00	2.89
85	5.8371	6.0154	6.1928	-2.96	2.86
86	5.6542	5.8249	5.9949	-2.93	2.84
87	5.4777	5.6413	5.8042	-2.90	2.81
88	5.3076	5.4644	5.6205	-2.87	2.78
89	5.1435	5.2937	5.4433	-2.84	2.75
90	4.9853	5.1292	5.2726	-2.81	2.72
91	4.8326	4.9705	5.1079	-2.77	2.69
92	4.6852	4.8174	4.9492	-2.74	2.66
93	4.5430	4.6697	4.7960	-2.71	2.63
94	4.4058	4.5272	4.6483	-2.68	2.61
95	4.2733	4.3896	4.5058	-2.65	2.58
96	4.1453	4.2568	4.3683	-2.62	2.55
97	4.0218	4.1287	4.2355	-2.59	2.52
98	3.9024	4.0049	4.1074	-2.56	2.50
99	3.7872	3.8854	3.9837	-2.53	2.47
100	3.6758	3.7700	3.8643	-2.50	2.44
101	3.5661	3.6585	3.7512	-2.53	2.47
102	3.4601	3.5509	3.6419	-2.56	2.50
103	3.3577	3.4468	3.5362	-2.59	2.53
104	3.2588	3.3463	3.4341	-2.61	2.56
105	3.1632	3.2491	3.3353	-2.64	2.58
106	3.0708	3.1551	3.2398	-2.67	2.61
107	2.9816	3.0643	3.1475	-2.70	2.64
108	2.8953	2.9765	3.0582	-2.73	2.67
109	2.8118	2.8915	2.9717	-2.76	2.70
110	2.7311	2.8093	2.8881	-2.78	2.73
111	2.6531	2.7299	2.8072	-2.81	2.75
112	2.5776	2.6530	2.7289	-2.84	2.78
113	2.5046	2.5785	2.6531	-2.87	2.81
114	2.4340	2.5065	2.5798	-2.89	2.84
115	2.3656	2.4368	2.5087	-2.92	2.87
116	2.2995	2.3693	2.4400	-2.95	2.90
117	2.2354	2.3040	2.3733	-2.98	2.92
118	2.1734	2.2407	2.3088	-3.00	2.95
119	2.1134	2.1795	2.2463	-3.03	2.97
120	2.0553	2.1201	2.1858	-3.06	3.01
121	1.9991	2.0626	2.1271	-3.08	3.03
122	1.9446	2.0070	2.0702	-3.11	3.05
123	1.8918	1.9530	2.0151	-3.13	3.08
124	1.8406	1.9007	1.9617	-3.16	3.11
125	1.7911	1.8500	1.9099	-3.18	3.14
126	1.7430	1.8009	1.8597	-3.22	3.16
127	1.6965	1.7533	1.8110	-3.24	3.19
128	1.6514	1.7071	1.7638	-3.26	3.21
129	1.6076	1.6623	1.7180	-3.29	3.24
130	1.5652	1.6189	1.6736	-3.32	3.27

12. SENSOR PARAMETER

2. THE PARAMETER OF THE OTHER SENSOR IN INDOOR AND OUTDOOR UNIT：

（R_0=15K±2%；B0/100=3450K±2%）

T [℃]	Rmin [KΩ]	Rnom [KΩ]	Rmax [KΩ]	DR(MIN)%	DR(MAX)%
-30	60.78	64.77	68.99	-6.16	6.12
-29	57.75	61.36	65.16	-5.88	5.83
-28	54.89	58.15	61.58	-5.61	5.57
-27	52.19	55.14	58.23	-5.35	5.31
-26	49.63	52.30	55.08	-5.11	5.05
-25	47.21	49.62	52.13	-4.86	4.81
-24	44.92	47.10	49.37	-4.63	4.60
-23	42.76	44.73	46.78	-4.40	4.38
-22	40.71	42.49	44.34	-4.19	4.17
-21	38.77	40.38	42.05	-3.99	3.97
-20	36.93	38.39	39.90	-3.80	3.78
-19	35.18	36.51	37.87	-3.64	3.59
-18	33.53	34.74	35.97	-3.48	3.42
-17	31.96	33.06	34.17	-3.33	3.25
-16	30.48	31.47	32.49	-3.15	3.14
-15	29.07	29.97	30.89	-3.00	2.98
-14	27.73	28.56	29.39	-2.91	2.82
-13	26.46	27.22	27.98	-2.79	2.72
-12	25.26	25.95	26.64	-2.66	2.59
-11	24.11	24.75	25.38	-2.59	2.48
-10	23.03	23.61	24.19	-2.46	2.40
-9	21.99	22.53	23.06	-2.40	2.30
-8	21.01	21.51	22.00	-2.32	2.23
-7	20.08	20.54	20.99	-2.24	2.14
-6	19.19	19.62	20.04	-2.19	2.10
-5	18.35	18.74	19.14	-2.08	2.09
-4	17.55	17.92	18.29	-2.06	2.02
-3	16.78	17.13	17.48	-2.04	2.00
-2	16.06	16.38	16.71	-1.95	1.97
-1	15.36	15.67	15.98	-1.98	1.94
0	14.70	15.00	15.29	-2.00	1.90
1	14.08	14.36	14.64	-1.95	1.91
2	13.48	13.75	14.02	-1.96	1.93
3	12.91	13.17	13.43	-1.97	1.94
4	12.36	12.62	12.87	-2.06	1.94
5	11.85	12.09	12.34	-1.99	2.03
6	11.35	11.59	11.83	-2.07	2.03
7	10.88	11.11	11.35	-2.07	2.11
8	10.43	10.66	10.89	-2.16	2.11
9	9.999	10.230	10.450	-2.26	2.11
10	9.590	9.816	10.040	-2.30	2.23
11	9.199	9.422	9.647	-2.37	2.33
12	8.826	9.047	9.269	-2.44	2.40
13	8.470	8.689	8.910	-2.52	2.48
14	8.129	8.347	8.567	-2.61	2.57
15	7.804	8.021	8.240	-2.71	2.66
16	7.493	7.709	7.928	-2.80	2.76
17	7.196	7.412	7.630	-2.91	2.86
18	6.912	7.127	7.346	-3.02	2.98
19	6.640	6.855	7.074	-3.14	3.10
20	6.381	6.595	6.815	-3.24	3.23
21	6.132	6.347	6.567	-3.39	3.35
22	5.894	6.109	6.330	-3.52	3.49

12. SENSOR PARAMETER

T [℃]	Rmin [KΩ]	Rnom [KΩ]	Rmax [KΩ]	DR(MIN)%	DR(MAX)%
23	5.667	5.882	6.103	-3.66	3.62
24	5.449	5.664	5.886	-3.80	3.77
25	5.240	5.456	5.678	-3.96	3.91
26	5.048	5.260	5.478	-4.03	3.98
27	4.864	5.072	5.286	-4.10	4.05
28	4.687	4.891	5.101	-4.17	4.12
29	4.517	4.717	4.924	-4.24	4.20
30	4.355	4.550	4.753	-4.29	4.27
31	4.198	4.390	4.589	-4.37	4.34
32	4.048	4.236	4.431	-4.44	4.40
33	3.904	4.089	4.280	-4.52	4.46
34	3.766	3.946	4.134	-4.56	4.55
35	3.663	3.810	3.994	-3.86	4.61
36	3.506	3.679	3.859	-4.70	4.66
37	3.383	3.552	3.729	-4.76	4.75
38	3.265	3.431	3.604	-4.84	4.80
39	3.152	3.314	3.484	-4.89	4.88
40	3.043	3.202	3.368	-4.97	4.93
41	2.938	3.094	3.257	-5.04	5.00
42	2.838	2.990	3.149	-5.08	5.05
43	2.741	2.890	3.046	-5.16	5.12
44	2.648	2.793	2.946	-5.19	5.19
45	2.558	2.701	2.850	-5.29	5.23
46	2.472	2.611	2.758	-5.32	5.33
47	2.389	2.525	2.669	-5.39	5.40
48	2.309	2.443	2.583	-5.49	5.42
49	2.232	2.363	2.500	-5.54	5.48
50	2.158	2.286	2.421	-5.60	5.58
51	2.087	2.212	2.344	-5.65	5.63
52	2.018	2.140	2.269	-5.70	5.69
53	1.952	2.072	2.198	-5.79	5.73
54	1.888	2.005	2.129	-5.84	5.82
55	1.827	1.941	2.062	-5.87	5.87
56	1.767	1.880	1.998	-6.01	5.91
57	1.710	1.820	1.936	-6.04	5.99
58	1.655	1.763	1.876	-6.13	6.02
59	1.602	1.707	1.818	-6.15	6.11
60	1.551	1.654	1.762	-6.23	6.13
61	1.502	1.602	1.709	-6.24	6.26
62	1.452	1.553	1.657	-6.50	6.28
63	1.409	1.505	1.606	-6.38	6.29
64	1.364	1.458	1.558	-6.45	6.42
65	1.322	1.413	1.511	-6.44	6.49
66	1.280	1.370	1.466	-6.57	6.55
67	1.241	1.328	1.422	-6.55	6.61
68	1.202	1.288	1.379	-6.68	6.60
69	1.165	1.249	1.339	-6.73	6.72
70	1.129	1.211	1.299	-6.77	6.77
71	1.095	1.175	1.261	-6.81	6.82
72	1.061	1.140	1.224	-6.93	6.86
73	1.029	1.106	1.188	-6.96	6.90
74	0.9977	1.073	1.153	-7.02	6.94
75	0.9676	1.041	1.120	-7.05	7.05
76	0.9385	1.011	1.088	-7.17	7.08
77	0.9104	0.9810	1.056	-7.20	7.10
78	0.8833	0.9523	1.026	-7.25	7.18

12. SENSOR PARAMETER

T [℃]	Rmin [KΩ]	Rnom [KΩ]	Rmax [KΩ]	DR(MIN)%	DR(MAX)%
79	0.8570	0.9246	0.9971	-7.31	7.27
80	0.8316	0.8977	0.9687	-7.36	7.33
81	0.8071	0.8717	0.9412	-7.41	7.38
82	0.7834	0.8466	0.9146	-7.47	7.43
83	0.7604	0.8223	0.8888	-7.53	7.48
84	0.7382	0.7987	0.8639	-7.57	7.55
85	0.7167	0.7759	0.8397	-7.63	7.60
86	0.6958	0.7537	0.8161	-7.68	7.65
87	0.6755	0.7322	0.7933	-7.74	7.70
88	0.6560	0.7114	0.7712	-7.79	7.75
89	0.6371	0.6913	0.7498	-7.84	7.80
90	0.6188	0.6718	0.7291	-7.89	7.86
91	0.6011	0.6530	0.7051	-7.95	7.39
92	0.5840	0.6348	0.6897	-8.00	7.96
93	0.5674	0.6171	0.6709	-8.05	8.02
94	0.5514	0.6000	0.6527	-8.10	8.07
95	0.5359	0.5835	0.6350	-8.16	8.11
96	0.5209	0.5675	0.6179	-8.21	8.16
97	0.5064	0.5519	0.6014	-8.24	8.23
98	0.4923	0.5369	0.5853	-8.31	8.27
99	0.4787	0.5224	0.5698	-8.37	8.32
100	0.4655	0.5083	0.5547	-8.42	8.36
101	0.4528	0.4946	0.5401	-8.45	8.42
102	0.4404	0.4814	0.5259	-8.52	8.46
103	0.4284	0.4685	0.5121	-8.56	8.51
104	0.4168	0.4561	0.4988	-8.62	8.56
105	0.4056	0.4440	0.4859	-8.65	8.62
106	0.3947	0.4323	0.4733	-8.70	8.66
107	0.3841	0.4210	0.4611	-8.76	8.70
108	0.3739	0.4100	0.4493	-8.80	8.75
109	0.3640	0.3993	0.4379	-8.84	8.81
110	0.3544	0.3890	0.4267	-8.89	8.84
111	0.3450	0.3789	0.4159	-8.95	8.90
112	0.3360	0.3692	0.4055	-8.99	8.95
113	0.3272	0.3597	0.3953	-9.04	9.01
114	0.3187	0.3505	0.3854	-9.07	9.06
115	0.3104	0.3416	0.3758	-9.13	9.10
116	0.3024	0.3330	0.3665	-9.19	9.14
117	0.2947	0.3246	0.3574	-9.21	9.18
118	0.2871	0.3164	0.3468	-9.26	8.77
119	0.2798	0.3085	0.3401	-9.30	9.29
120	0.2727	0.3008	0.33	-9.34	9.34

12. SENSOR PARAMETER

B25/50=3950K±3% R25=15KΩ±3%

Temp	Resistance（KΩ）		
（℃）	Rmax	R(t)Normal	Rmin
-30	250.952	230.189	209.426
-29	236.568	217.234	197.900
-28	223.091	205.085	187.078
-27	210.459	193.686	176.913
-26	198.614	182.987	167.360
-25	187.503	172.942	158.380
-24	177.077	163.506	149.935
-23	167.288	154.639	141.989
-22	158.095	146.303	134.511
-21	149.458	138.464	127.470
-20	141.341	131.090	120.839
-19	134.087	124.486	114.885
-18	127.219	118.227	109.235
-17	120.715	112.294	103.873
-16	114.556	106.671	98.786
-15	108.724	101.342	93.960
-14	103.202	96.291	89.380
-13	97.972	91.503	85.034
-12	93.020	86.965	80.910
-11	88.330	82.663	76.996
-10	83.889	78.585	73.281
-9	79.683	74.720	69.757
-8	75.698	71.055	66.412
-7	71.925	67.581	63.237
-6	68.349	64.286	60.223
-5	64.962	61.162	57.362
-4	61.754	58.200	54.646
-3	58.713	55.390	52.067
-2	55.833	52.726	49.619
-1	53.102	50.198	47.294
0	50.514	47.800	45.086
1	48.061	45.525	42.989
2	45.735	43.366	40.997
3	43.530	41.317	39.104
4	41.440	39.373	37.306
5	39.457	37.527	35.597
6	37.576	35.775	33.974
7	35.792	34.111	32.430
8	34.100	32.532	30.964
9	32.494	31.031	29.568
10	30.970	29.606	28.242
11	29.523	28.252	26.981
12	28.150	26.966	25.782
13	26.846	25.743	24.640
14	25.608	24.581	23.554

12. SENSOR PARAMETER

Temp	Resistance（KΩ）		
（℃）	Rmax	R(t)Normal	Rmin
15	24.433	23.477	22.521
16	23.315	22.426	21.537
17	22.254	21.428	20.602
18	21.246	20.478	19.710
19	20.288	19.575	18.862
20	19.377	18.715	18.053
21	18.511	17.897	17.283
22	17.688	17.119	16.550
23	16.903	16.377	15.851
24	16.159	15.672	15.185
25	15.450	15.000	14.550
26	14.802	14.360	13.918
27	14.183	13.750	13.317
28	13.595	13.170	12.745
29	13.033	12.616	12.199
30	12.496	12.088	11.680
31	11.985	11.585	11.185
32	11.498	11.106	10.714
33	11.032	10.648	10.264
34	10.588	10.212	9.836
35	10.163	9.795	9.427
36	9.758	9.398	9.038
37	9.371	9.019	8.667
38	9.001	8.656	8.311
39	8.648	8.311	7.974
40	8.310	7.980	7.650
41	7.988	7.665	7.342
42	7.678	7.363	7.048
43	7.383	7.075	6.767
44	7.102	6.800	6.498
45	6.832	6.537	6.242
46	6.573	6.285	5.997
47	6.326	6.044	5.762
48	6.089	5.814	5.539
49	5.862	5.593	5.324
50	5.645	5.382	5.119
51	5.437	5.180	4.923
52	5.238	4.987	4.736
53	5.047	4.801	4.555
54	4.864	4.624	4.384
55	4.689	4.454	4.219
56	4.520	4.291	4.062
57	4.359	4.135	3.911
58	4.204	3.985	3.766
59	4.055	3.841	3.627
60	3.913	3.704	3.495
61	3.775	3.571	3.367
62	3.645	3.445	3.245

12. SENSOR PARAMETER

Temp	Resistance（KΩ）		
（℃）	Rmax	R(t)Normal	Rmin
63	3.518	3.323	3.128
64	3.397	3.206	3.015
65	3.280	3.094	2.908
66	3.168	2.986	2.804
67	3.061	2.883	2.705
68	2.957	2.783	2.609
69	2.858	2.688	2.518
70	2.762	2.596	2.430
71	2.670	2.508	2.346
72	2.582	2.423	2.264
73	2.496	2.341	2.186
74	2.414	2.262	2.110
75	2.335	2.187	2.039
76	2.259	2.114	1.969
77	2.186	2.044	1.902
78	2.115	1.977	1.839
79	2.047	1.912	1.777
80	1.981	1.849	1.717
81	1.918	1.789	1.660
82	1.857	1.731	1.605
83	1.799	1.675	1.551
84	1.742	1.621	1.500
85	1.687	1.569	1.451
86	1.635	1.519	1.404
87	1.585	1.472	1.359
88	1.536	1.426	1.315
89	1.490	1.381	1.273
90	1.445	1.338	1.232
91	1.401	1.297	1.193
92	1.359	1.257	1.156
93	1.318	1.219	1.119
94	1.279	1.182	1.084
95	1.241	1.146	1.050
96	1.205	1.111	1.018
97	1.169	1.078	0.986
98	1.135	1.046	0.956
99	1.102	1.015	0.927
100	1.070	0.984	0.898
101	1.040	0.955	0.871
102	1.010	0.927	0.845
103	0.981	0.900	0.819
104	0.953	0.874	0.795
105	0.926	0.849	0.771

13. Troubleshooting

13.1 Trouble guide

Troubleshooting for normal malfunction

Troubleshooting	Possible Reasons of Abnormality	How to Deal With
Air conditioner can not start up	1. Power supply failure; 2. Trip of breaker or blow of fuse; 3. Power voltage is too low; 4. Improper setting of remote controller; 5. Remote controller is short of power.	1. Check power supply circuit; 2. Measure insulation resistance to ground to see if there is any leakage; 3. Check if there is a defective contact or leak current in the power supply circuit; 4. Check and set remote controller again; 5. Change batteries.
The compressor starts or stops frequently	The airinlet and outlet have been blocked.	Remove obstacles.
Poor cooling/heating	1. The outdoor heat exchanger is dirty, such as condenser; 2. There are heating devices indoors; 3. The airtightness is not enough, and people come in and out too frequently; 4. Block of outdoor heate xchanger; 5. Improper setting of temperature.	1. Clean the heat exchanger of the outdoor unit, such as condenser; 2. Remove heating devices; 3. Keep certain air tightness indoors; 4. Remove block obstacles; 5. Check and try to set temperature again.
Sound from deforming parts	During system starting or stopping, a sound might be heard.However, this is due to the normal deformation of plastic parts.	It is not abnormal, and the sound will disappear soon.
Water leakage	1. Drainage pipe is blocked or broken; 2. Wrap of refrigerant pipe joint is not closed completely.	1. Change drainage pipe; 2. Re-wrap and make it tight.

13. TROUBLESHOOTING

How to check fault codes

Troubleshooting according to fault codes

When the air conditioner failure occurs, the fault code will display on control board, or maintenance board.

Outdoor unit

Fault code displayed by LED lamps on outdoor main control board.
There are 3 LED lamps on control board, LED1, LED2 and LED3.
LED1 indicates fault code represented by 2-digit number, LED2 indicates fault code represented by single digit number and LED3 indicates outdoor drive control fault. When LED3 is off, LED1 and LED 2 indicate main control fault code.
When LED3 is on, LED1 and LED 2 indicate drive control fault code.
When LED3 is flickering and LED1, LED 2 are all off, indicate compressor is preheating. Failures display with 5s interval. It means LED will be off for 5s to report next fault code. System protection codes display method is the same with main control fault code. LED lamps will be off when there is no failure, protection or preheating.

Up to 2 IDUs series

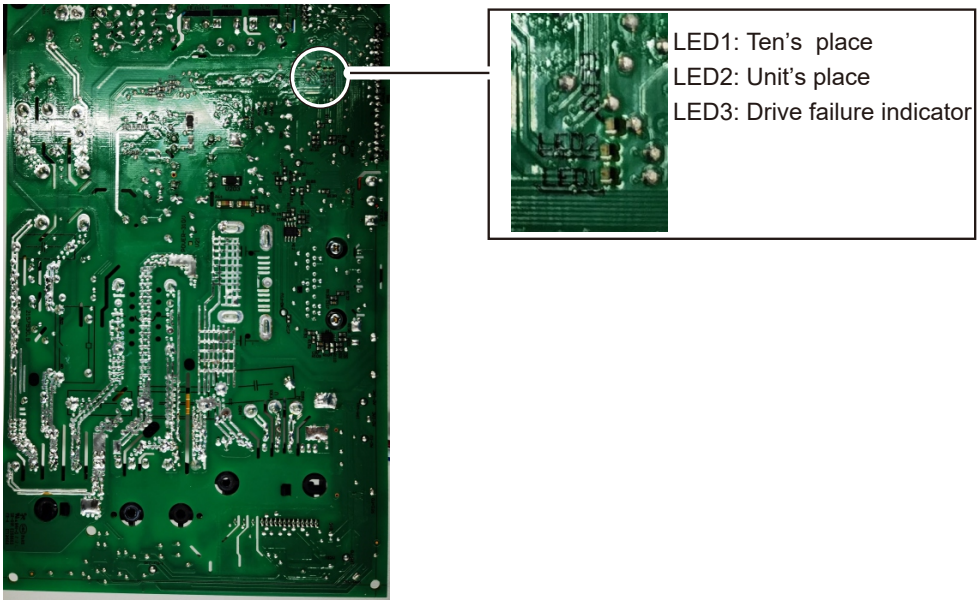

Up to 3/4 IDUs series

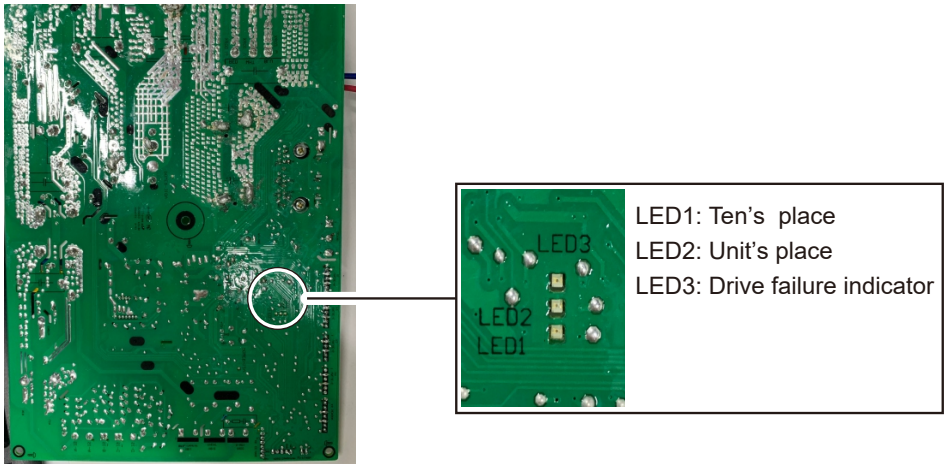

13. TROUBLESHOOTING

Up to 5 IDUs series

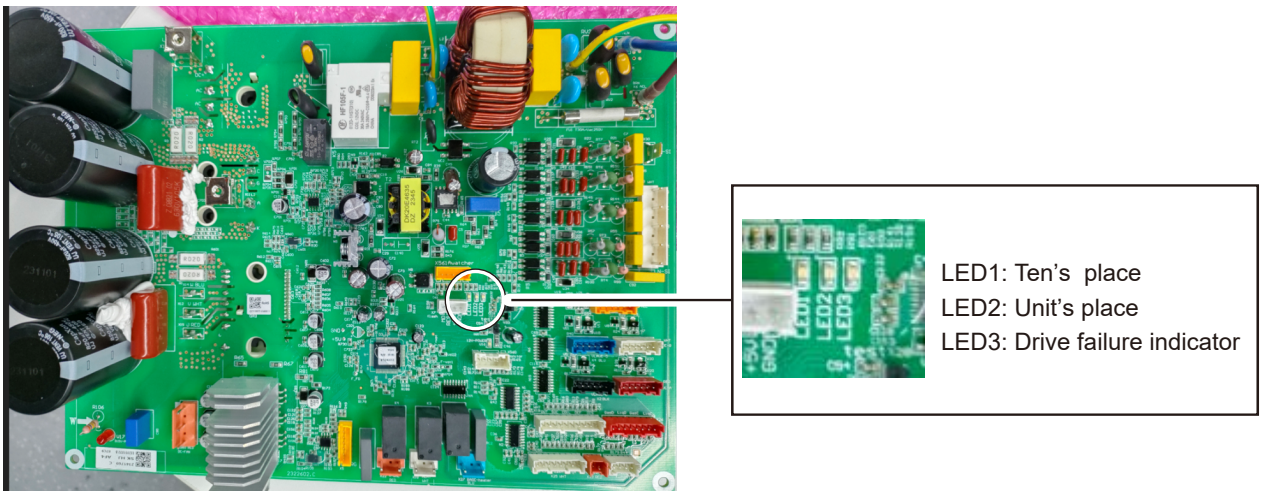

For example, outdoor main control fault 32:

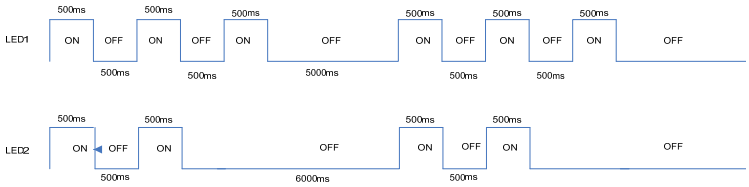

For example, outdoor drive fault 32:

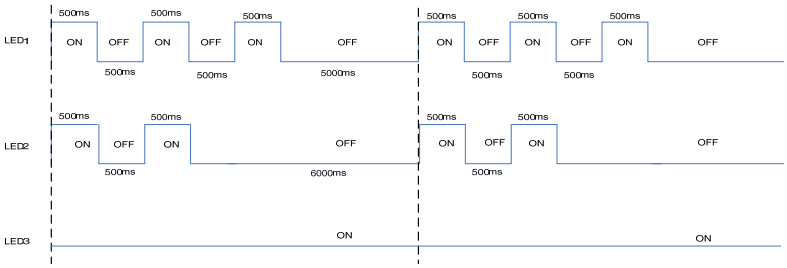

Up to 3/4/5 IDUs series, fault codes also can be checked by 7 segment display on the maintenance board. Fault codes will display directly when fault occurs.

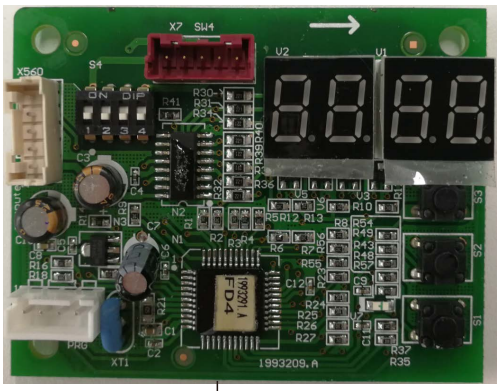

Maintenance Board

E shows failure occur

Display ERROR Code

13.2 Fault codes

Table 1 Outdoor fault codes

Fault code	Fault description	Possible reasons for abnormality	How to deal with	Remarks
1	Outdoor ambient temperature sensor fault	1.The outdoor ambient temperature sensor is connected loosely; 2.The outdoor ambient temperature sensor fails to work; 3.The sampling circuit fails.	1.Reconnect the outdoor ambient temperature sensor; 2.Replace the outdoor ambient temperature sensor components; 3.Replace the outdoor control board components.	
2	Outdoor coil temperature sensor fault	1.The outdoor coil temperature sensor is connected loosely; 2.The outdoor coil temperature sensor fails to work; 3.The sampling circuit fails.	1.Reconnect the outdoor coil temperature sensor; 2.Replace the outdoor coil temperature sensor components; 3.Replace the outdoor control board components.	
3	The unit over-current turn off fault	1. Control board current sampling circuit fails; 2. The current is over high because the supply voltage is too low; 3. The compressor is blocked; 4. Overload in cooling mode; 5. Overload in heating mode.	1. Replace the electrical control board components; 2. Normal protection; 3. Replace the compressor; 4. Please see Table 2; 5. Please see Table 3.	
4	EEprom Data error	1.EE components fails; 2.EE components control circuit fails; 3.EE components are inserted incorrectly.	1.Replace the EE components; 2.Replace the outdoor control board components; 3.Reassemble the EE components.	
5	Cooling freezing protection (the indoor coil temperature is too low) or heating overload (indoor coil temperature is too high)	1.The indoor unit can not blow air normally; 2.The room temperature is too low in cooling mode or the room temperature is too high in heating; 3.The filter is dirty; 4.The duct resistance is too high to result in low air flow; 5.The setting fan speed is too low; 6.The indoor unit is not installed in accordance with the installation standards, and the air inlet is too close to the air outlet .	1.Check whether the indoor fan, indoor fan motor and evaporator work normally; 2.Normal protection; 3.Clean the filter; 4.Check the volume control valve, duct length etc.; 5.Set the speed with high speed; 6.Reinstall the indoor unit referring to the user manual to change the distance between the indoor unit and the wall or ceiling.	
7	The communication fault between the indoor unit and outdoor unit	1.The connection cable is connected improperly between the indoor unit and outdoor unit; 2.The communication cable is connected loosely; 3.The communication cable fails; 4.The indoor control board fails; 5.The outdoor control board fails; 6.Communication circuit fuse open; 7.The specification of communication cable is incorrect.	1.Reconnect the connection cable referring to the wiring diagram; 2.Reconnect the communication cable; 3.Replace the communication cable; 4.Replace the indoor control board; 5.Replace the outdoor control board; 6.Check the communication circuit, adjust the DIP switch and the short-circuit fuse. 7.Choose suitable communication cable referring to the user manual.	

13. TROUBLESHOOTING

Fault code	Fault description	Possible reasons for abnormality	How to deal with	Remarks
13	Compressor overheat protector device	1. The wiring of the overload protector is connected loosely. 2. The overload protector fails . 3. The refrigerant is not enough; 4. The installation pipe is much longer than the normal one, but extra refrigerant is not added ; 5. The expansion valve fails; 6. The outdoor control board fails.	1. Reconnect the wiring of the overload protector; 2. Replace the overload protector; 3. Check the welding point of the unit to confirm whether it is leakage, and then recharge the refrigerant; 4. Add the refrigerant; 5. Replace expansion valve; 6. Replace the outdoor control board.	
16	Overload protection in cooling mode	System overload	Please refer to Table 2.	
17	Discharge temperature sensor fault	1.The wiring of the discharge tempe-rature sensor is connected loosely; 2. The discharge temperature sensor fails; 3.The sampling circuit is abnormal.	1. Reconnect the wiring of the discharge temperature sensor; 2. Replace the discharge temperature sensor; 3. Replace the outdoor control board.	
18	AC voltage is abnormal	1.The AC voltage>275V or <160V; 2.The AC voltage of sampling circuit on the driver board is abnormal.	1. Normal protection, please check the supply power; 2. Replace the driver board.	
19	Suction temperature sensor fault	1.The wiring of the suction tempe-rature sensor is connected loosely; 2.The suction temperature sensor fails; 3.The sampling circuit is abnormal.	1.Reconnect the wiring of the suction temperature sensor; 2.Replace the suction temperature sensor; 3.Replace the outdoor control board.	
22	The defrosting sensor fault	1. The wiring of the defrosting sensor is connected loosely; 2. The defrosting sensor fails; 3. The sampling circuit is abnormal.	1. Reconnect the wiring of the defrosting sensor; 2. Replace the defrosting sensor; 3. Replace the outdoor control board.	
23	Expansion valve A pipe (liquid) sensor fault	1. The wiring of the sensor for the expansion valve A(liquid pipe) is connected loosely; 2. The sensor for the expansion A (liquid pipe) fails; 3. The sampling circuit is abnormal.	1. Reconnect the wiring of the sensor for the expansion valve A (liquid pipe); 2. Replace the sensor for the expansion valve A (liquid pipe); 3. Replace the outdoor control board.	
24	Expansion valve B (liquid) pipe sensor fault	1. The wiring of the sensor for the expansion valve B (liquid pipe) is connected loosely; 2.The sensor for the expansion valve B(liquid pipe) fails; 3.The sampling circuit is abnormal.	1. Reconnect the wiring of the sensor for the expansion valve B(liquid pipe); 2. Replace the sensor for the expansion valve B(liquid pipe); 3. Replace the outdoor control board.	
25	Expansion valve C (liquid) pipe sensor fault	1. The wiring of the sensor for the expansion valve C (liquid pipe) is connected loosely; 2. The sensor of the expansion valve C (liquid pipe) fails; 3. The sampling circuit fails.	1. Reconnect the wiring of the sensor for the expansion valve C (liquid pipe); 2. Replace the sensor for the expansion valve C (liquid pipe); 3. Replace the outdoor control board.	

Fault code	Fault description	Possible reasons for abnormality	How to deal with	Remarks
26	Expansion valve D (liquid) pipe sensor fault	1. The wiring of the sensor for the expansion valve D (liquid pipe) is connected loosely; 2. The sensor of the expansion valve D (liquid pipe) fails; 3. The sampling circuit fails.	1. Reconnect the wiring of the sensor for the expansion valve D (liquid pipe); 2. Replace the sensor for the expansion valve D (liquid pipe); 3. Replace the outdoor control board.	
27	Expansion valve A (gas pipe) sensor fault	1. The wiring of the sensor for the expansion valve A (gas pipe) is connected loosely; 2. The sensor of the expansion valve A (gas pipe) fails; 3. The sampling circuit fails.	1. Reconnect the wiring of the sensor for the expansion valve A (gas pipe); 2. Replace the sensor for the expansion valve A (gas pipe); 3. Replace the outdoor control board.	
28	Expansion valve B (gas pipe) sensor fault	1. The wiring of the sensor for the expansion valve B (gas pipe) connect is connected loosely; 2. The sensor of the expansion valve B (gas pipe) fails; 3. The sampling circuit fails.	1. Reconnect the wiring of the sensor for the expansion valve B (gas pipe); 2. Replace the sensor for the expansion valve B (gas pipe); 3. Replace the outdoor control board.	
29	Expansion valve C (gas pipe) sensor fault	1. The wiring of the sensor for the expansion valve C (gas pipe) connect is connected loosely; 2. The sensor of the expansion valve C (gas pipe) fails; 3. The sampling circuit fails.	1. Reconnect the wiring of the sensor for the expansion valve B (gas pipe); 2. Replace the sensor for the expansion valve C (gas pipe); 3. Replace the outdoor control board.	
30	Expansion valve D (gas pipe) sensor fault	1. The wiring of the sensor for the expansion valve D (gas pipe) connect is connected loosely; 2. The sensor of the expansion valve D (gas pipe) fails; 3. The sampling circuit fails.	1. Reconnect the wiring of the sensor for the expansion valve B (gas pipe); 2. Replace the sensor for the expansion valve D (gas pipe); 3. Replace the outdoor control board.	
45	IPM fault	There are many reasons for this failure. You can check the driver board fault LED to further analyze the fault code of the drive board and to learn about what leads to the fault and how to operate it. Specific information can be seen in table 4.	See attached "analysis of the driving board fault".	
46	IPM and control board communication fault	1.The control board and the driver board is loose; 2.The cable between the control board and the driver board fails; 3.The driver board fails; 4.The control board fails.	1.Reconnect the communication cable ; 2.Replace the communication cable; 3.Replace the driver board; 4.Replace the control board.	

Fault code	Fault description	Possible reasons for abnormality	How to deal with	Remarks
47	Discharge temperature is too high	1. The refrigerant of the unit is not enough; 2. The refrigerant of the unit is not enough ; 3. Throttling service fails; 4. The outdoor ambient temperature is too high.	1. Check to confirm whether there is leakage exist; 2. Add some refrigerant referring to the installation user manual; 3.Replace the throttling service(such as capillary, expansion valve) 4. Normal protection.	
48	The outdoor DC fan motor fault (upper fan motor)	1.The connecting wiring of the up DC fan motor is loose; 2.The cord of the upper DC fan motor fails; 3.The upper DC fan motor fails; 4.The drive circuit of the upper DC fan motor fails; 5.The outdoor fan has been blocked.	1.Reconnect the wiring of the up DC fan motor; 2.Replace the upper DC fan motor; 3.Replace the upper DC fan motor; 4.Replace the driver board of the fan motor; 5.Check the outdoor fan and ensure the outdoor fan can run normally.	
50	Expansion valve E (gas pipe) sensor fault	1. The wiring of the sensor for the expansion valve E (gas pipe) connect is connected loosely; 2. The sensor of the expansion valve E (gas pipe) fails; 3. The sampling circuit fails.	1. Reconnect the wiring of the sensor for the expansion valve E (gas pipe); 2. Replace the sensor for the expansion valve E (gas pipe); 3. Replace the outdoor control board.	
53	Expansion valve E (liquid) pipe sensor fault	1. The wiring of the sensor for the expansion valve E (liquid pipe) is connected loosely; 2. The sensor of the expansion valve E (liquid pipe) fails; 3. The sampling circuit fails.	1. Reconnect the wiring of the sensor for the expansion valve E (liquid pipe); 2. Replace the sensor for the expansion valve E (liquid pipe); 3. Replace the outdoor control board.	
67	Fan of IPM device overheat protect	1. The fan of IPM is overload; 2. The circuit of IPM fails.	1. Normal protection; 2. Replace the IPM.	
91	The unit turn off due the IPM board over heating fault	1.The outdoor ambient temp. is too high; 2.The speed of the out fan motor is too low if the fan motor is AC fan motor; 3.The outdoor unit is not installed in accordance with the standard; 4.The supply power is too low.	1. Normal protection; 2. Check the fan capacitor, and replace the fan capacitor if it is failure; 3. Reinstalled the outdoor unit refer to the installation user manual; 4. Normal protection.	
96	Lacking of refrigerant	The refrigerant of the unit is not enough.	Discharge the refrigerant and charge the refrigerant referring to the rating label.	
97	4-way valve commutation failure fault	1.The connecting wiring of the 4-way valve coil is loose; 2.The 4-way valve coil fails; 3.The 4-way valve fails; 4.The driver board of the 4-way valve fails.	1. Reconnect the wiring of the 4-way valve; 2. Replace the 4-way valve coil; 3. Replace the 4-way valve; 4.Replace the driver board of the 4-way valve.	

Table 2 Overload in cooling mode

	Overload in cooling mode	
sr.	**The root cause**	**Corrective measure**
1	The refrigerant is excessive.	Discharge the refrigerant, and recharge the refrigerant referring to the rating label.
2	The outdoor ambient temperature is too high.	Please use it within allowable temperature range
3	Short-circuit occurs in the air outlet and air inlet of the outdoor unit.	Adjust the installation of the outdoor unit referring to the user manual.
4	The outdoor heat exchanger is dirty, such as condenser.	Clean the heat exchanger of the outdoor unit, such as condenser.
5	The speed of the outdoor fan motor is too low.	Check the outdoor fan motor and fan capacitor.
6	The outdoor fan is broken or the outdoor fan is blocked.	Check the outdoor fan.
7	The air inlet and outlet have been blocked.	Remove the obstacles.
8	The expansion valve or the capillary fails.	Replace the expansion valve or the capillary.

Table 3 Overload in heating mode

	Overload in heating mode	
sr.	**The root cause**	**Corrective measure**
1	The refrigerant is excessive.	Discharge the refrigerant, and recharge the refrigerant referring to the rating label.
2	The indoor ambient temperature is too high.	Please use within allowable temperature range.
3	Short-circuit occurs in the air outlet and air inlet of the indoor unit.	Adjust the installation of the indoor unit referring to the user manual.
4	The indoor filter is dirty.	Clean the indoor filter.
5	The speed of the indoor fan motor is too low.	Check the indoor fan motor and fan capacitor.
6	The indoor fan is broken or the outdoor fan is blocked.	Check the indoor fan.
7	The air inlet and outlet have been blocked.	Remove the obstacles.
8	The expansion valve or the capillary fails.	Replace the expansion valve or the capillary.

Table 4 Analysis of the driving board fault

Fault code	Fault description	Possible reasons for abnormality	How to deal with
1	Inverter DC voltage overload fault	1. Power supply input is too high or too low; 2. Driver board fault.	1. Check the power supply; 2. Change the driver board.
2	Inverter DC low voltage fault		
3	Inverter AC current overload fault		
4	Out-of-step detection	1. Compressor phase lost; 2. Bad driver board components; 3. The compressor insulation fault.	1. Check the compressor wire connection; 2. Change the driver board; 3. Change the compressor.
5	Loss phase detection fault (speed pulsation)		
6	Loss phase detection fault (current imbalance)		
7	Inverter IPM fault (edge)	1. System overload or current overload; 2. Driver board fault; 3. Compressor oil shortage, serious wear of crankshaft ; 4. The compressor insulation fault.	1. Check the system; 2. Change the driver board; 3. Change the compressor; 4. Change the compressor.
8	Inverter IPM fault (level)		
9	PFC fault (edge)		
10	PFC fault (level)		
11	PFC power detection of failure	1. The power supply is not stable; 2. Instantaneous power failure; 3. Driver board failure.	1. Check the power supply; 2. No need to deal with; 3. Change the driver board.
12	PFC overload current detection of failure.	1. System overloads, and the current is too high; 2. Driver board fails; 3. PFC fails.	1.Check the system; 2.Change the driver board; 3.Change the PFC.
13	DC voltage detected abnormal .	1. Input voltage is too high or too low; 2. Driver board fails.	1. Check the power supply; 2. Change the driver board.
14	PFC LOW voltage detected failure.		
15	AD offset abnormal detected failure.	Driver board fails.	Change the driver board.
16	Inverter PWM logic set fault.		
17	Inverter PWM initialization failure		
18	PFC_PWM logic set fault.		
19	PFC_PWM initialization fault.		
20	Temperature abnormal.		
21	Shunt resistance unbalance adjustment fault		
22	Communication failure.	1. Communication wire connection is not proper; 2. Driver board fails; 3. Control board fails.	1. Check the wiring; 2. Change the driver board; 3. Change the control board.
23	Motor parameters setting of failure	Initialization is abnormal.	Reset the power supply.
25	EE data abnormal	Driver board EEPROM is abnormal.	1. Change EEPROM; 2. Change the driver board.
26	DC voltage mutation error	1. Power input changes suddenly; 2. Driver board fails.	1.Check the power supply, to provide stable power supply; 2.Change the driver board.
27	D axis current control error	1. System overload, phase current is too high; 2. Driver board fails.	1. Check if the system is normal; 2. Check if the stop valve is open; 3. Change the driver board.
28	Q axis current control error	1. System overload, phase current is too high; 2. Driver board fails.	1. Check if the system is normal; 2. Check if the stop valve is open; 3. Change the driver board.
29	Saturation error of D axis current control integral	1. System overloads suddenly; 2. Compressor parameter is not suitable; 3. Driver board fails.	1. Check if the system is normal; 2. Check if the stop valve is open; 3. Change the driver board.
30	Saturation error of Q axis current control integral	1. System overloads suddenly; 2. Compressor parameter is not suitable; 3. Driver board fails.	1. Check if the system is normal; 2. Check if the stop valve is open; 3. Change the driver board.

13. TROUBLESHOOTING

Fault code	Fault description	Possible reasons for abnormality	How to deal with
50	Inverter software over-current	1. The fan motor system overloads; 2. The drive board falis; 3. The fan motor is not insulated well;	1. Change the fan motor; 2. Change the drive board; 3. Change the fan motor.
51	Out-of-step detection	1.The wire is not connected well; 2.Bad drive board components; 3.The fan motor starting overloads; 4. The fan motor is demagnetized; 5. The fan motor is not insulated well.	1.Check the fan motor wire connection; 2.Change the drive board; 3.Change the fan motor. 4.Change the fan motor. 5.Change the fan motor.
52	Abnormal speed control	1.Bad driver board components; 2.The fan motor shaft clamping; 3.The fan motor insulation fails.	1.Change the drive board; 2.Change the fan motor. 3.Change the fan motor.
53	Out of phase detection fault	1. Phase loss of the fan motor; 2. Bad drive board components.	1. Change the drive board; 2. Change the fan motor; 3. Change the fan motor
54	IPM-FO hardware over-current (edge)	1.The fan motor overloads or over-current; 2.The drive board fails; 3.The fan motor insulation fails.	1. Change the fan motor; 2. Change the drive board; 3. Change the fan motor
55	IPM-FO hardware over-current (level)	1.The fan motor overloads or over-current; 2.The drive board fails; 3.The fan motor insulation fails.	1. Change the fan motor; 2. Change the drive board; 3. Change the fan motor
56	The fan motor -AD Offset abnormal detection fault	The drive board circuit fails.	Change the drive board.
57	The fan motor speed control integral saturation	1. The fan motor overload mutation; 2. Parameters are inappropriate; 3. The drive board fault.	1. Change the fan motor system; 2. Change the fan motor; 3. Change the drive board.
58	The fan motor D,Q axis current control error	1. The fan motor overloads, the phase current is large; 2. The drive board fault.	1. Check the fan motor system; 2. Change the drive board.
59	The fan motor D,Q axis current control integral saturation	1. The fan motor overload mutation; 2. Parameters are inappropriate; 3. The drive board fault.	1. Change the fan motor system; 2. Change the fan motor; 3. Change the drive board.
60	The fan motor reverse	1. Bad drive board components; 2. Wiring problems	1. Change the drive board; 2. Check the wiring.
61	IPM-PWM initialization fault	1. EE logics error; 2. The drive board fails.	1. Change the drive board; 2. Change the drive board.

Table 5 Limitation Code

Code	Definitions	Descriptions
101	When overcurrent occurs, stop the frequency from increasing.	Current control
102	When overcurrent occurs, reduce the frequency.	Current control
103	When the temperature of IPM module is too high, stop the frequency from increasing.	Frequency control to keep appropriate temperature of IPM module.
104	When the temperature of IPM module is too high, reduce the frequency.	Frequency control to keep appropriate temperature of IPM module.
105	When the discharge temperature is too high, stop the frequency from increasing.	Frequency control to keep appropriate discharge temperature.
106	When the discharge temperature is too high, reduce the frequency.	Frequency control to keep appropriate discharge temperature.
107	In cooling mode, when the temperature of the outdoor unit coil is too high, stop the frequency from increasing.	Frequency control to keep appropriate temperature of the outdoor unit coil in cooling mode.
108	In cooling mode, when the temperature of the outdoor unit coil is too high, reduce the frequency.	Frequency control to keep appropriate temperature of the outdoor unit coil in cooling mode.
113	To prevent the indoor unit from being frozen or high temperature, stop the frequency from increasing.	Frequency control to keep appropriate temperature of the indoor unit coil.
114	To prevent the indoor unit from being frozen or high temperature, reduce the frequency.	Frequency control to keep appropriate temperature of the indoor unit coil.
119	When DSH exceeds the target value, the valve opening gets wider to adjust the flow.	Control on expansion valve based on DSH.
120	When DSH exceeds the target value, the valve opening gets narrower to adjust the flow.	Control on expansion valve based on DSH.
121	When DSH exceeds the target value, stop the valve opening from getting narrower.	Control on expansion valve based on DSH.
122	When DSH exceeds the target value, stop the valve opening from getting wider.	Control on expansion valve based on DSH.
131	When the temperature of IPM module is too high, stop the frequency from increasing.	Frequency control to keep appropriate temperature of IPM module.
132	When the temperature of IPM module is too high, reduce the frequency.	Frequency control to keep appropriate temperature of IPM module.
134	When the discharge temperature is too high, stop the valve opening getting narrower.	Control on discharge temperature expansion valve.
140	The compressor overloads.	Control on the compressor output.
141	The compressor current overloads.	Control on the output torque of the compressor.

※ DSH: Discharge Super Heat
These codes appearing in the operation process indicate some kind of normal operation state, instead of faults, so they do not need to be dealt with.

14. Checking components

14.1 Check refrigerant system

TEST SYSTEM FLOW

Conditions: ① Compressor is running.
② The air condition should be installed in good ventilation.
Tool: Pressure Gauge
Technique: ① see ② feel ③ test

See ----- Tube defrost.
Feel ----- The difference between tube's temperature.
Test ----- Test pressure.

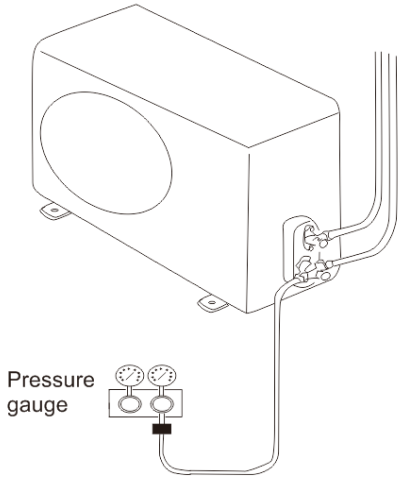

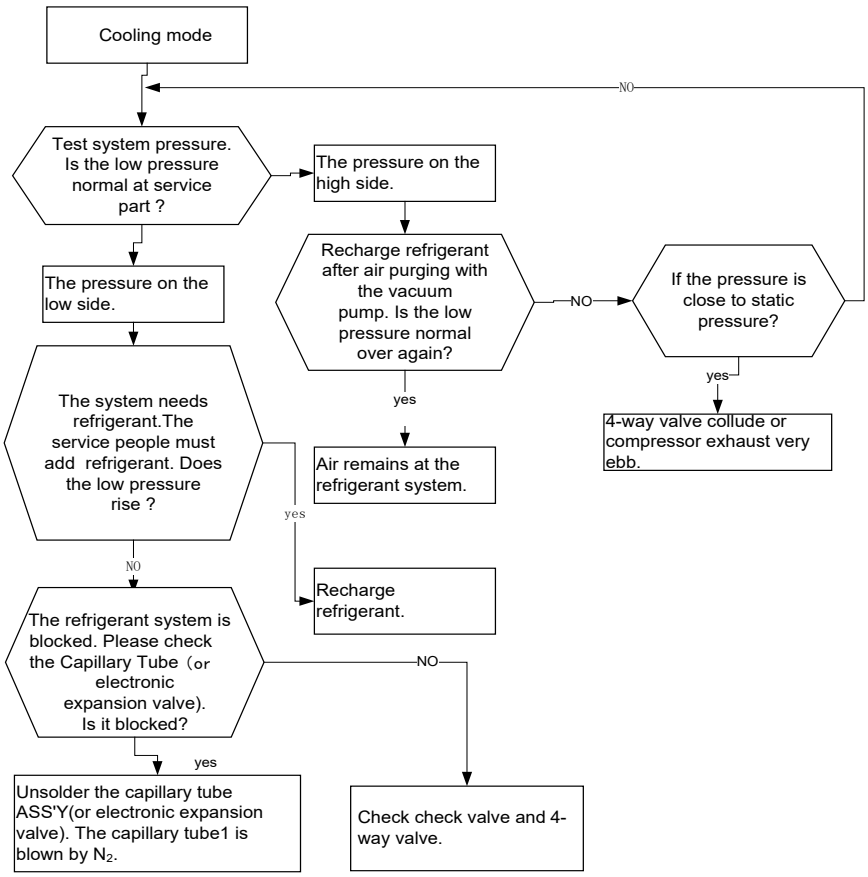

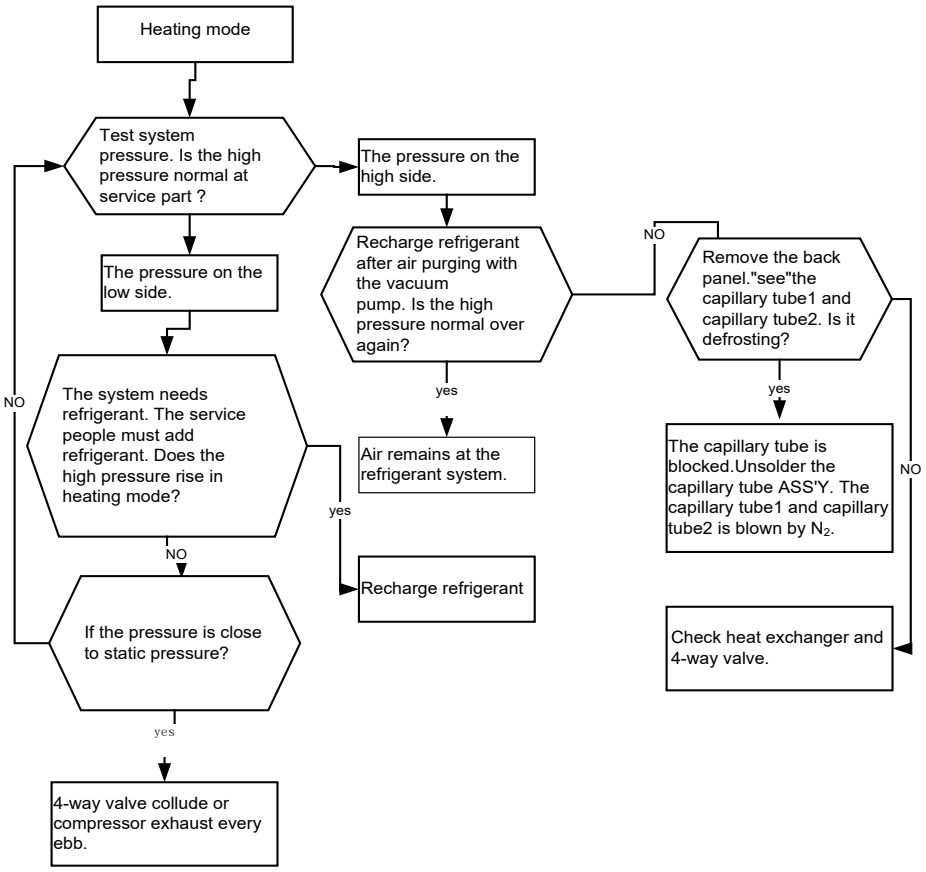

14.2 Check parts unit

1. Outdoor unit fan motor(DC type)

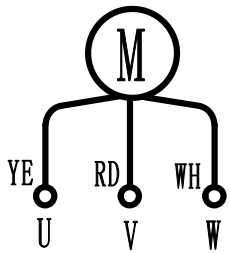

Test in voltage(For DC motor)
TOOL: Multimeter.

Insert screwdriver to rotate indoor fan motor slowly for 1 revolution or over, and measure voltage "YELLOW" and "GND" on motor. The voltage repeat 0V DC and 5V DC.

NOTE: Please don't hold motor by lead wires.
Please don't plug IN/OUT the motor connector while power ON.
Please don't drop hurl or dump motor against hard material. Malfunction may not be observed at early stage after such shock. But it may be found later, this type of mishandling void our warranty.

2. Compressor

Up to 2 IDUs series:14K model : KSN108D34UFZ 18K model: KTN130D42UFZ Up to 3 IDUs series: 18Kmodel: KTN150D42UFZ Up to 4 IDUs series:
27K model: KTM240D43UMT
Up to 5 IDUs series:
36K model: KTM310D85UMT

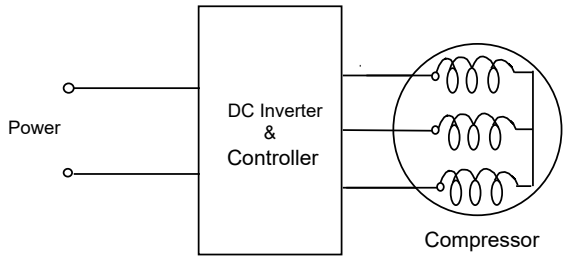

Compressor examine and repair

Test in resistance.

TOOL: Multi-meter.

Test the resistance of the winding. The compressor fails if the resistance of winding is 0 (short circuit)or∞(open circuit).

Familiar error:

1) Compressor motor lock.
2) Discharge pressure value approaches static pressure value.
3) Compressor motor winding abnormality.

Notes：

1) Don’t put a compressor on its side or turn over.
2) Please assemble the compressor in your air conditioner rapidly after removing the plugs. Don’t place the comp. in air for a long time.
3) Avoid compressor running in reverse caused by connecting electrical wire incorrectly.
4) Warning! In case AC voltage is impressed to compressor, the compressor performance will decrease because of its rotor magnetic force decreasing.

15. Disassembly procedure

Outdoor unit

Disassembly and assembly for compressor and motor

The special tools for compressor & motor disassembly and assembly：

	Tool
1	Hexagon Screwdriver
2	Hexagon Socket

14K~27K

Important: Before disassembly and assembly, make sure that the power to the system has been disconnected and verified as voltage free.

Step	Illustration	Handling Instruction
1. Remove external casing	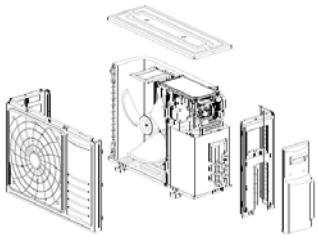	1. Remove the top cover and terminal parts; 2. Remove the outer case and right side plate.
2. Remove motor	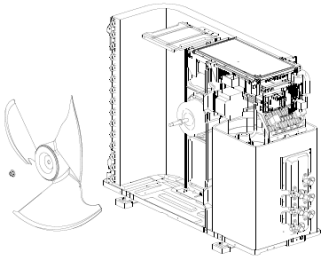	1. Remove the blade nut and then remove the blade; 2. Remove the motor from motor supporter.
3. Remove compressor	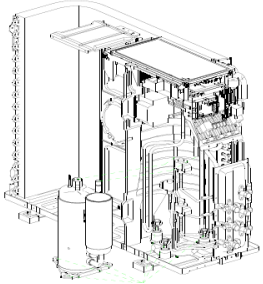	1. Reclaim the refrigerant from the entire system; 2. Unsolder the piping assy from compressor; 3. Remove the compressor mounting bolts; 4. Carefully remove the compressor from chassis.
4. Assemble unit	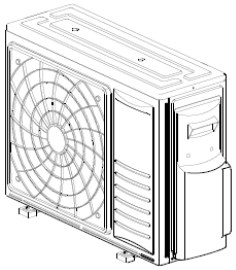	Assemble the unit in the reverse order of disassembly.

15. DISASSEMBLY PROCEDURE

36K

Important: Before disassembly and assembly, make sure that the power to the system has been disconnected and verified as voltage free.		
Step	Illustration	Handling Instruction
1.Remove external casing	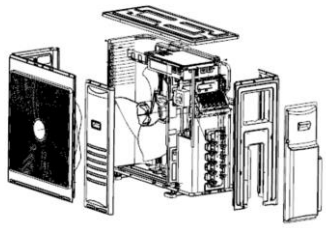	1.Remove the top cover and Valve bonnet; 2.Remove the outer case ;
2.Remove motor	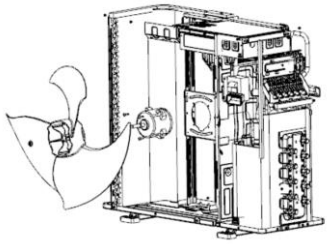	1.Remove the blade nut and then remove the blade; 2.Remove the motor from motor supporter;
3.Remove compressor	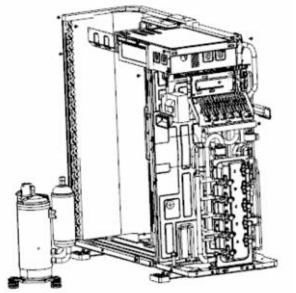	1. Unsolder the 4-way valve piping assy from compressor; 2. Remove the compressor mounting bolts; 3. Carefully remove the compressor from chassis.
4.Assemble unit	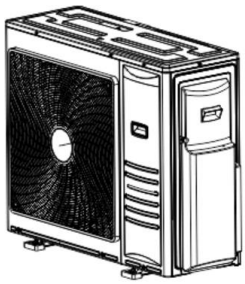	Assemble the unit in the reverse order of disassembly.

Hisense

We reserve the right to change the manual without prior notice.

Fixed 04.06.2025